LBD NO. 0.340

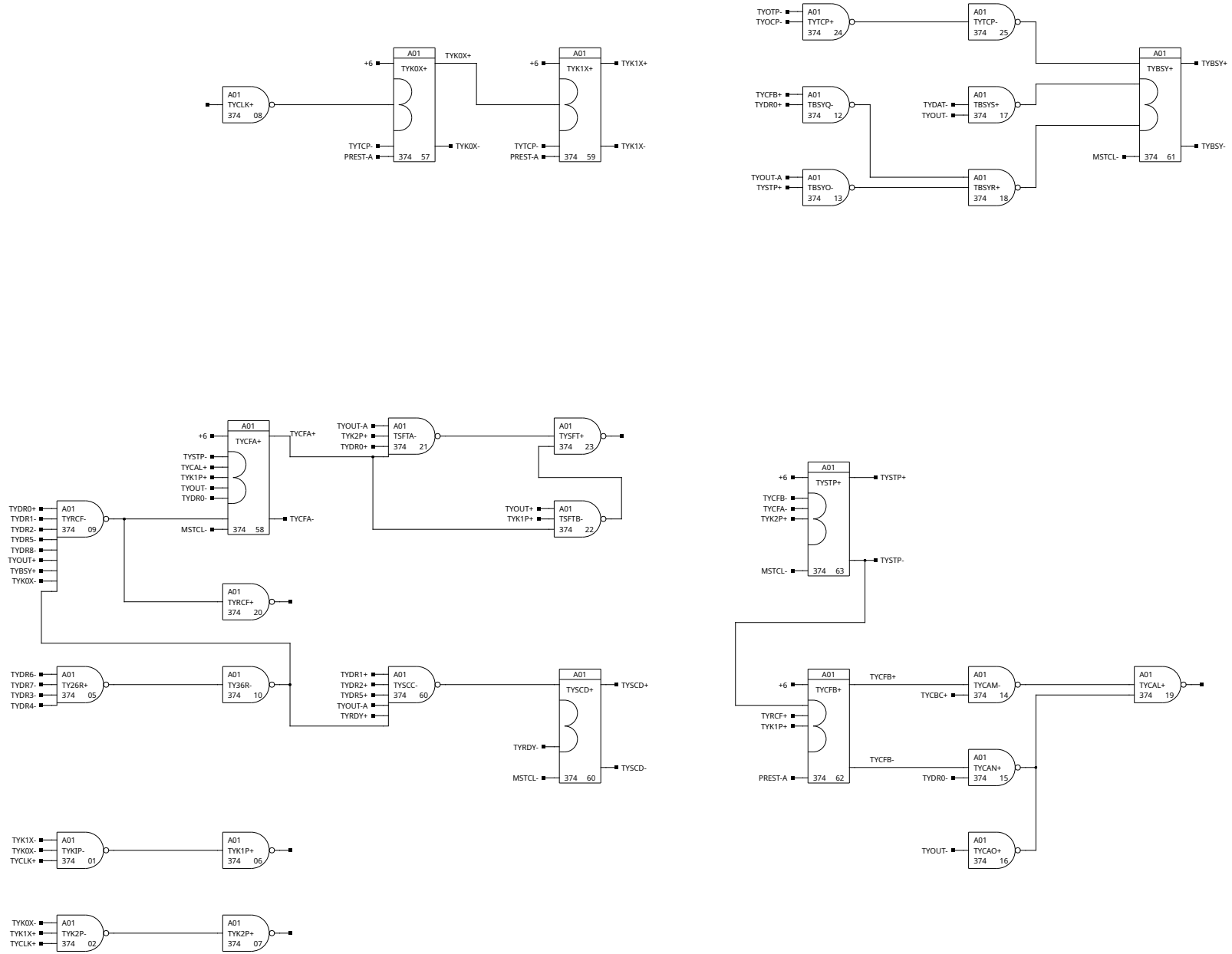

~~NOTES:~~

REV.	REVISIONS	CHK.
A	S. R. 54-3585	

HONEYWELL INC
COMPUTER CONTROL DIVISION
Old Connecticut Path, Framingham, Mass

DR.	D. HAMEL	DATE
ENG.	K. IZBICKI	1-9-1969
APP.		4-10-69
PROJECT NO.	53202	

TITLE
H-316
ASR 33/35
CONTROL

SIZE	DWG NO.	REV.
C	70024526	A