LBD NO. 0.341

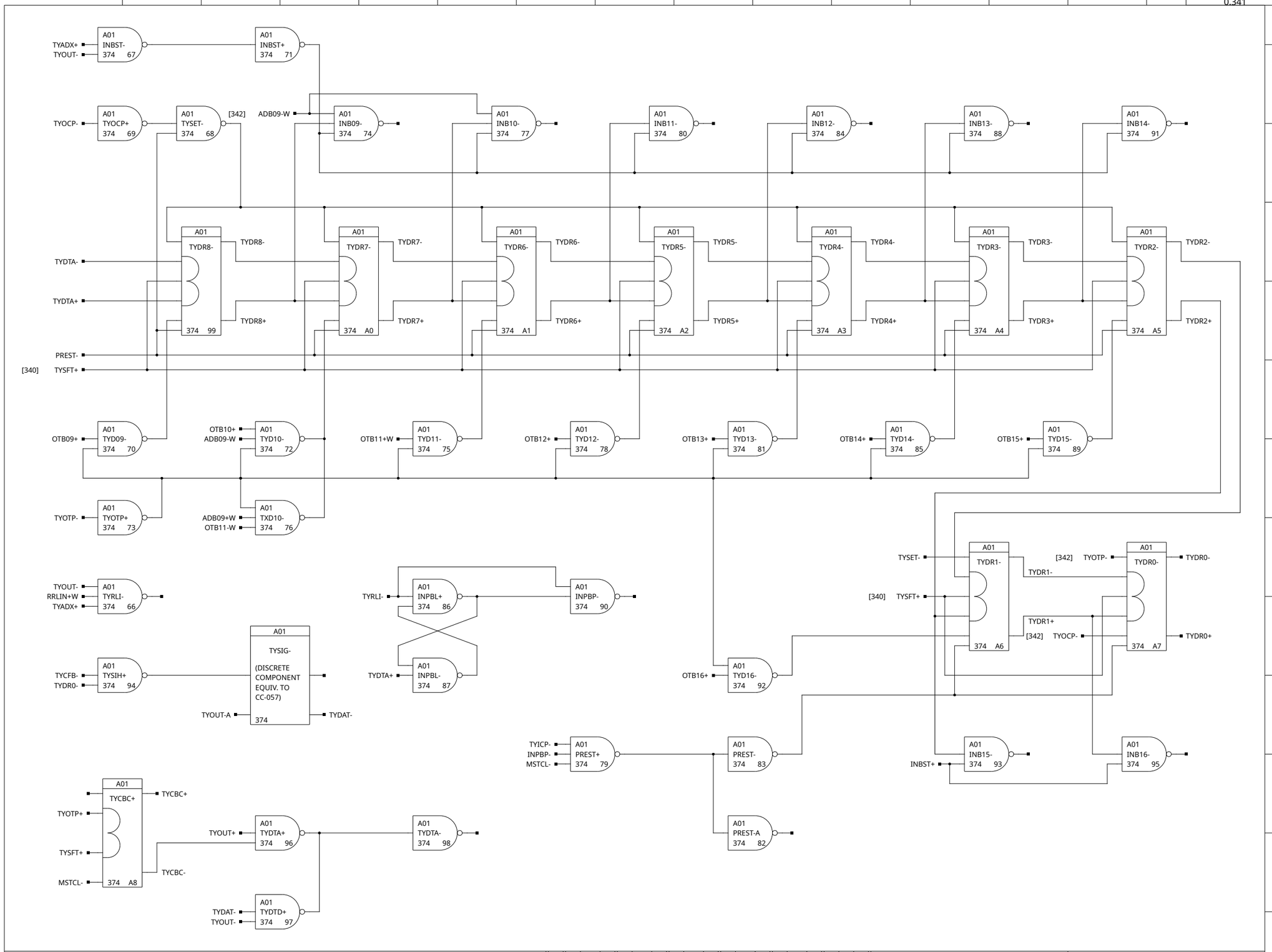

NOTES:

REV.	REVISIONS	CHK.
A		
B 1/19/70	ECO 7748 EXT CHANGES SEE ECO T.A.	

S. R. 54-3585

HONEYWELL INC
COMPUTER CONTROL DIVISION
Old Connecticut Path, Framingham, Mass

DR.	D. HAMEL	DATE
ENG.	K. IZBICKI	1-8-1969
APP.		4-10-69
PROJECT NO.	53202	

TITLE
H-316 -56
BUFFER REGISTER
ASR 33/35

SIZE	DWG NO.	REV.
C	70024527	B