LBD NO. 0.342

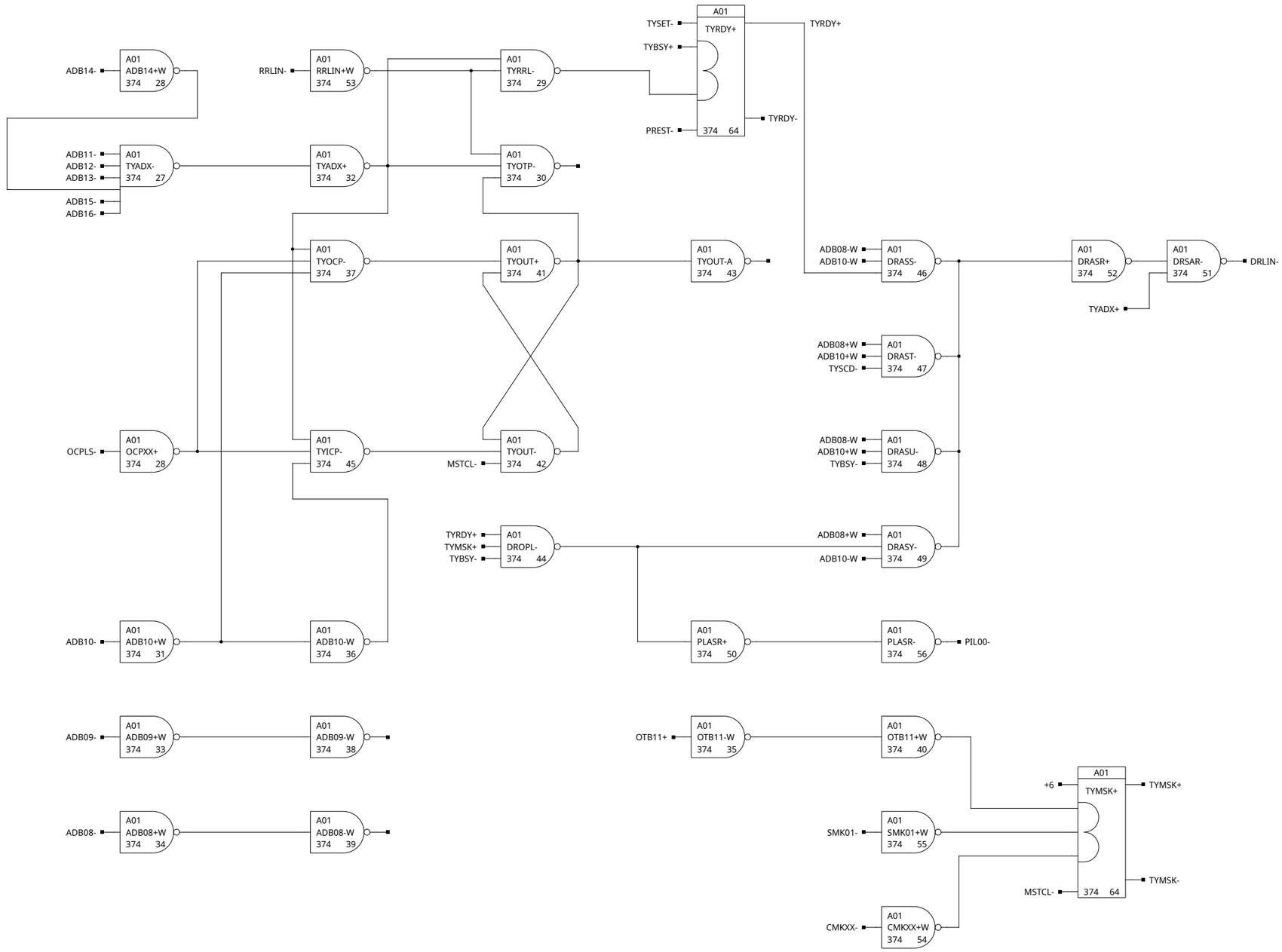

~~NOTES:~~

REV.	REVISIONS	CHK.
A		

S. R. 54-3585

HONEYWELL INC
COMPUTER CONTROL DIVISION
Old Connecticut Path, Framingham, Mass

DR.	JD. GILMARTIN	DATE
ENG.	K. IZBICKI	1-8-1969
APP.		4-10-69
PROJECT NO.	53202	

TITLE
H-316
ADDRESS & SKS
ASR 33/35

SIZE	DWG NO.	REV.
C	70024528	A