LBD NO. 0.003

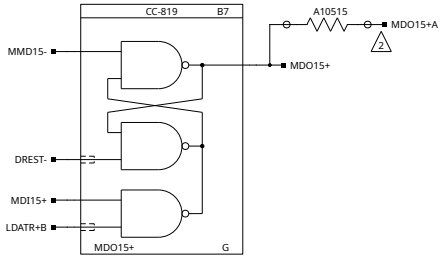

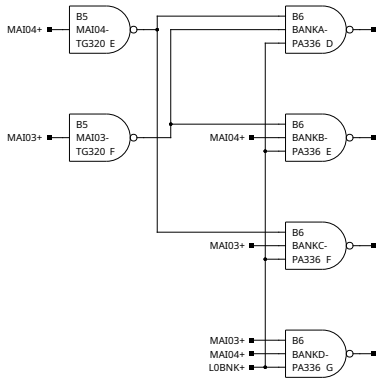

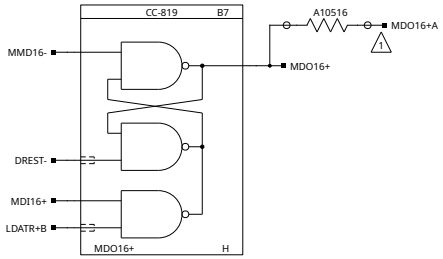

~~NOTES:~~

1. ADD A RESISTOR FROM B10720 TO A10516 ON THE BACKPLANE
2. ADD A RESISTOR FROM B10729 TO A10515 ON THE BACKPLANE

REV.	REVISIONS	CHK.
A	S. R. 54-3915	
B	ECO 8458 EXT. CHGS SEE ECO 3/27/70	A.K.
C	ECO 9490 EXT. CHGS SEE ECO 6/4/71	A.K.
D	ECO 9617 SEE ECO 7/2/71	SSR
E	ECO 20687 SEE ECO 12/13/72	T.L.R. 12/27

HONEYWELL INC
COMPUTER CONTROL DIVISION
Old Connecticut Path, Framingham, Mass

DR.	D. HAMEL	DATE
ENG.	R. ALBRIGHT	5/13/69
APP.		9/13/69
PROJECT NO.	53217	

TITLE
H-316-0602
MEMORY EXPANSION
DATA REGISTER BITS 15, 16 & BANK SIGNALS

SIZE C | DWG NO. 70025827 | REV. E