LBD NO. 0.101

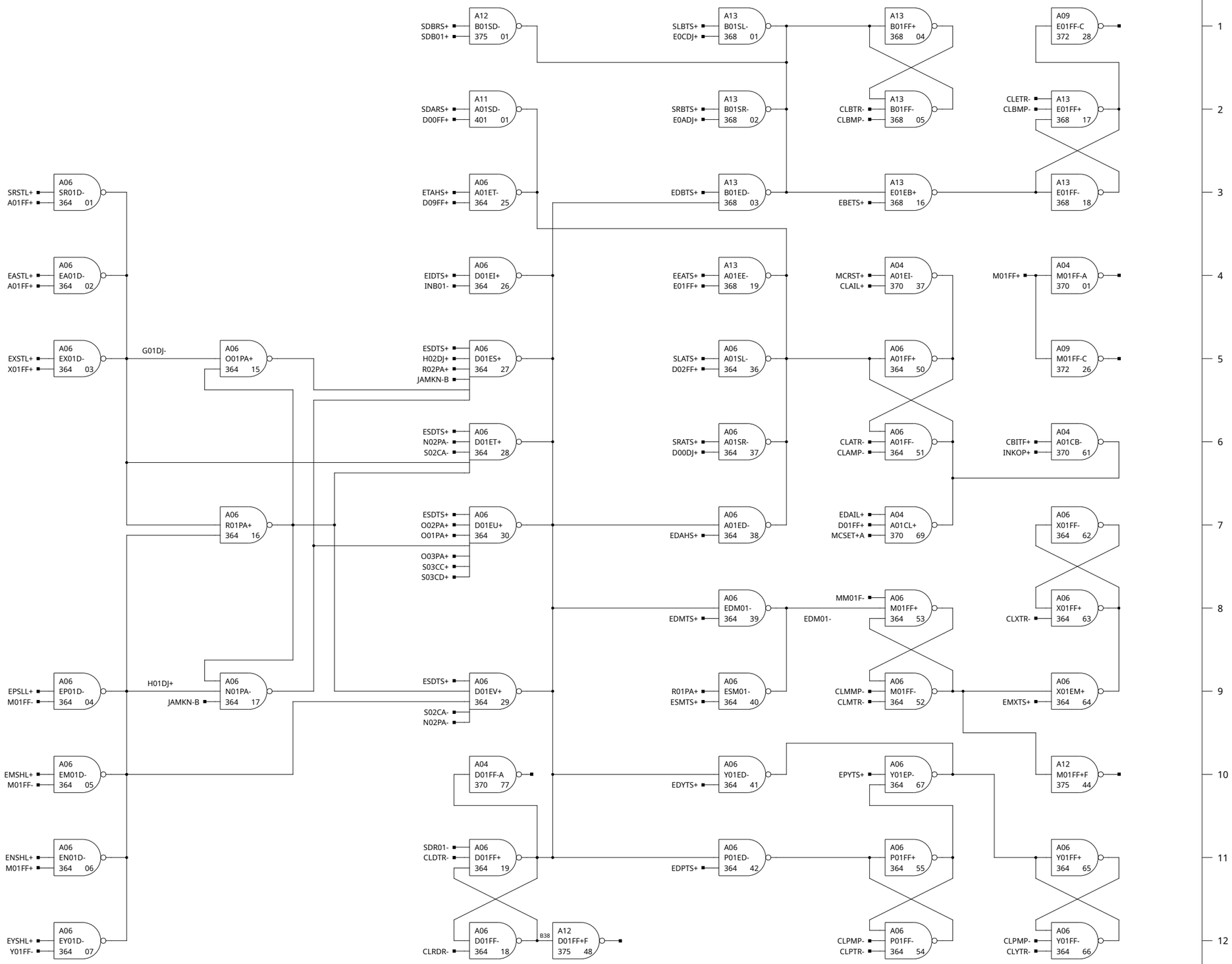

NOTES:

REV.		
A	S. R. 54-3585	
B	ECO 7748	1/19/70 EXT CHANGES SEE ECO T.A.

REVISIONS

CHK.

HONEYWELL INC
COMPUTER CONTROL DIVISION
Old Connecticut Path, Framingham, Mass

DR.	D. HAMEL	DATE
ENG.	K. IZBICKI	11-26-68
APP.		7-8-69
PROJECT NO.	55202	

TITLE
H-316
COLUMN No. 1

SIZE C | DWG NO. 70024485 | REV. B