LBD NO. 0.101

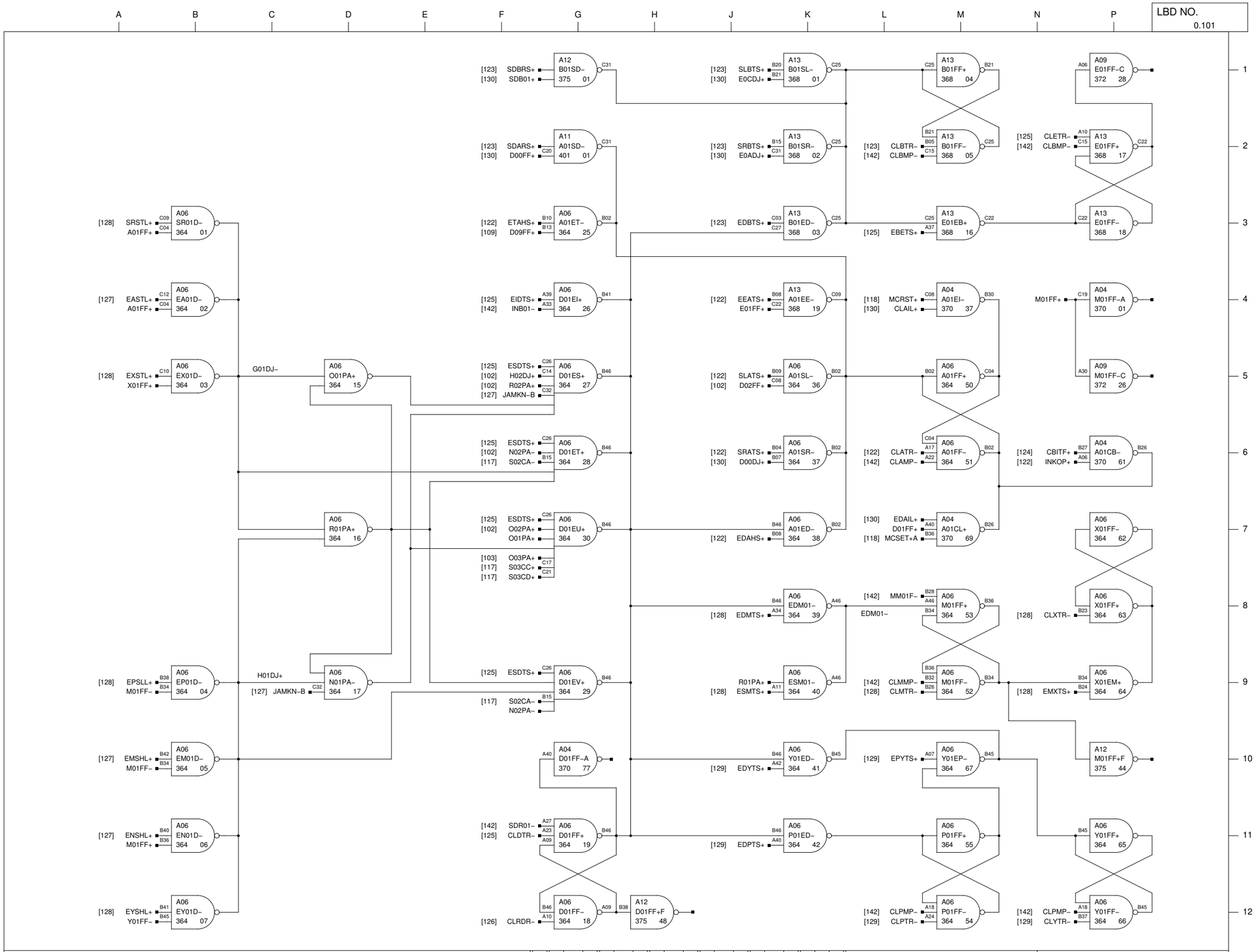

NOTES:

REV.	REVISIONS	OK.
A	—	—
B	ECO 7748 EXT CHANGES SEE ECO T.A. 1/19/70	

S. R. 54–3585

HONEYWELL INC
COMPUTER CONTROL DIVISION
Old Connecticut Path, Framingham, Mass

DR. D. HAMEL	DATE	
ENG. K. IZBICKI	11–26–68	
APP.	7–8–69	
PROJECT NO. 55202		

TITLE
H–316
COLUMN No. 1

SIZE	DWG NO.	REV.
C	70024485	B