LBD NO. 0.103

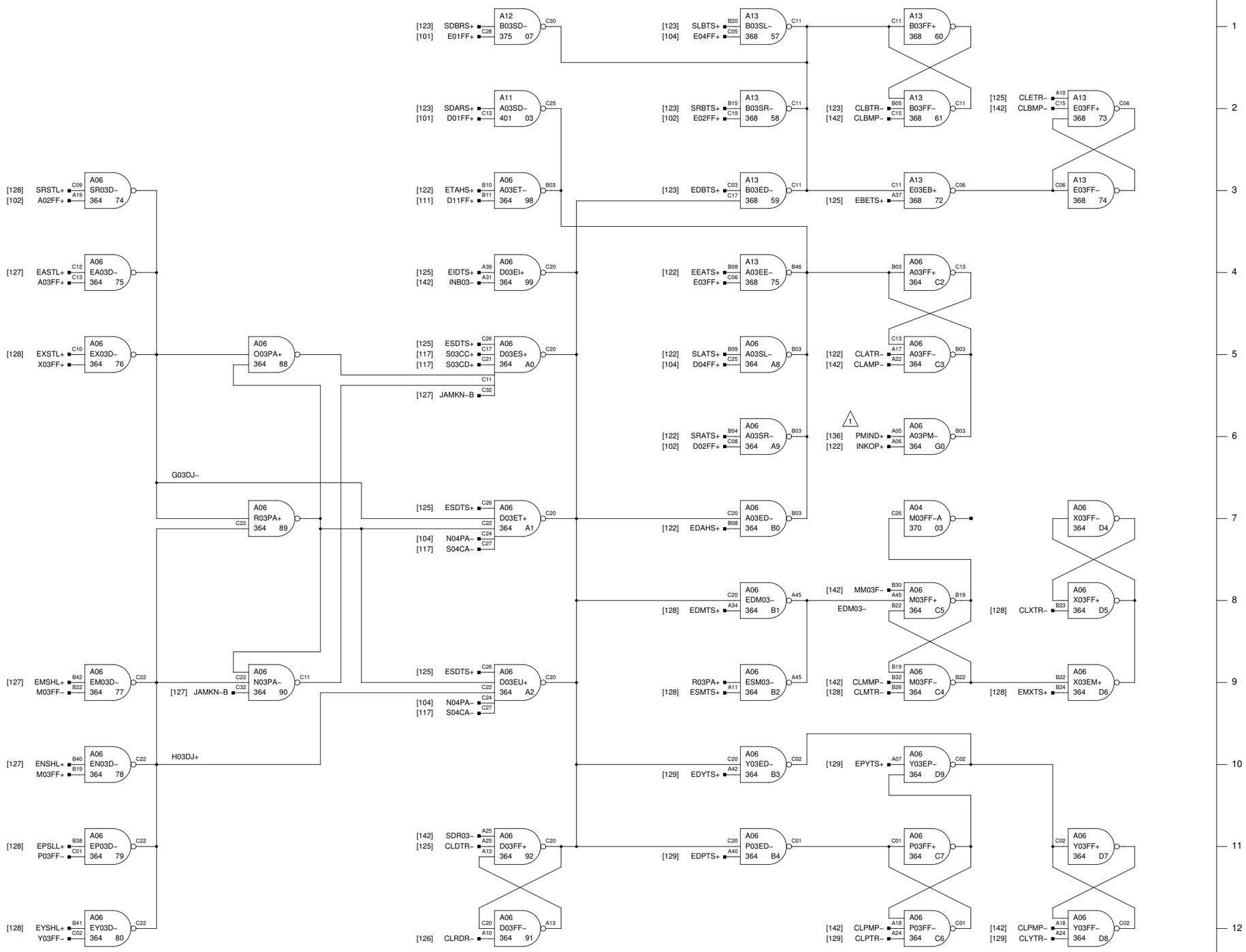

NOTES:

1. THIS PT MUST BE GND WITH NO EXT ADD OPTION

REV.	REVISIONS	CHK.
A	S. R. 54–3585	
B	N 8200 10 15500 17500 EXT CHANGES SEE ECO T.A. 1/19/70	

HONEYWELL INC
COMPUTER CONTROL DIVISION
Old Connecticut Path, Framingham, Mass

DR. D. HAMEL	DATE	
ENG. K. IZBICKI	11–26–68	
APP.	7–8–69	
PROJECT NO. 55202		

TITLE
H–316
COLUMN No. 3

SIZE	DWG NO.	REV.
C	70024487	B