LBD NO. 0.105

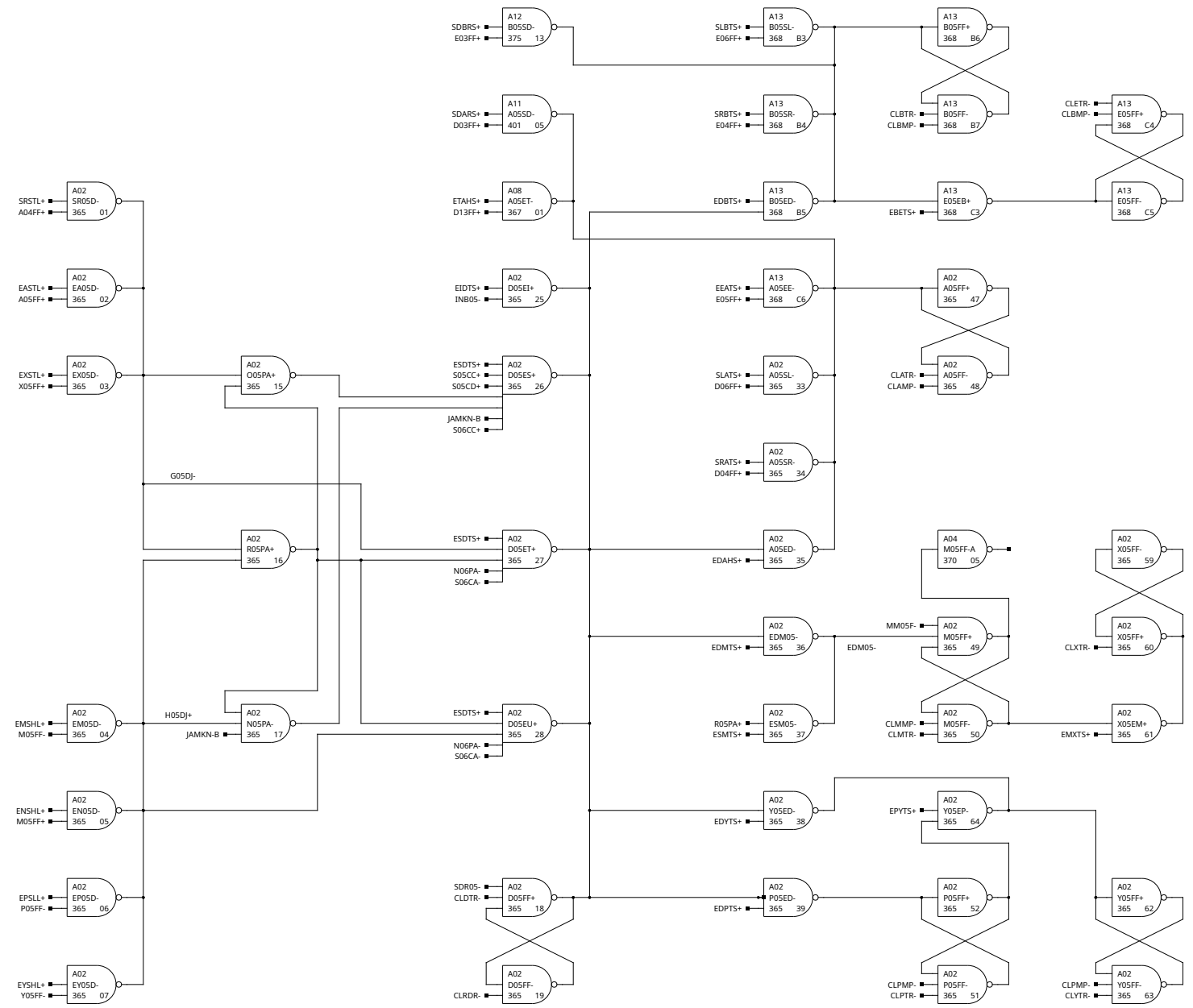

NOTES:

REV.	REVISIONS	CHK.	
A	S. R. 54-3585		
B	ECO 7748 EXT CHANGES SEE ECO T.A.		1/19/70

HONEYWELL INC
COMPUTER CONTROL DIVISION
Old Connecticut Path, Framingham, Mass

DR.	D. HAMEL	DATE
ENG.	K. IZBICKI	11-26-68
APP.		7-2-69
PROJECT NO.	55202	

TITLE
H-316
COLUMN No. 5

SIZE	DWG NO.	REV.
C	70024489	B