LBD NO. 0.106

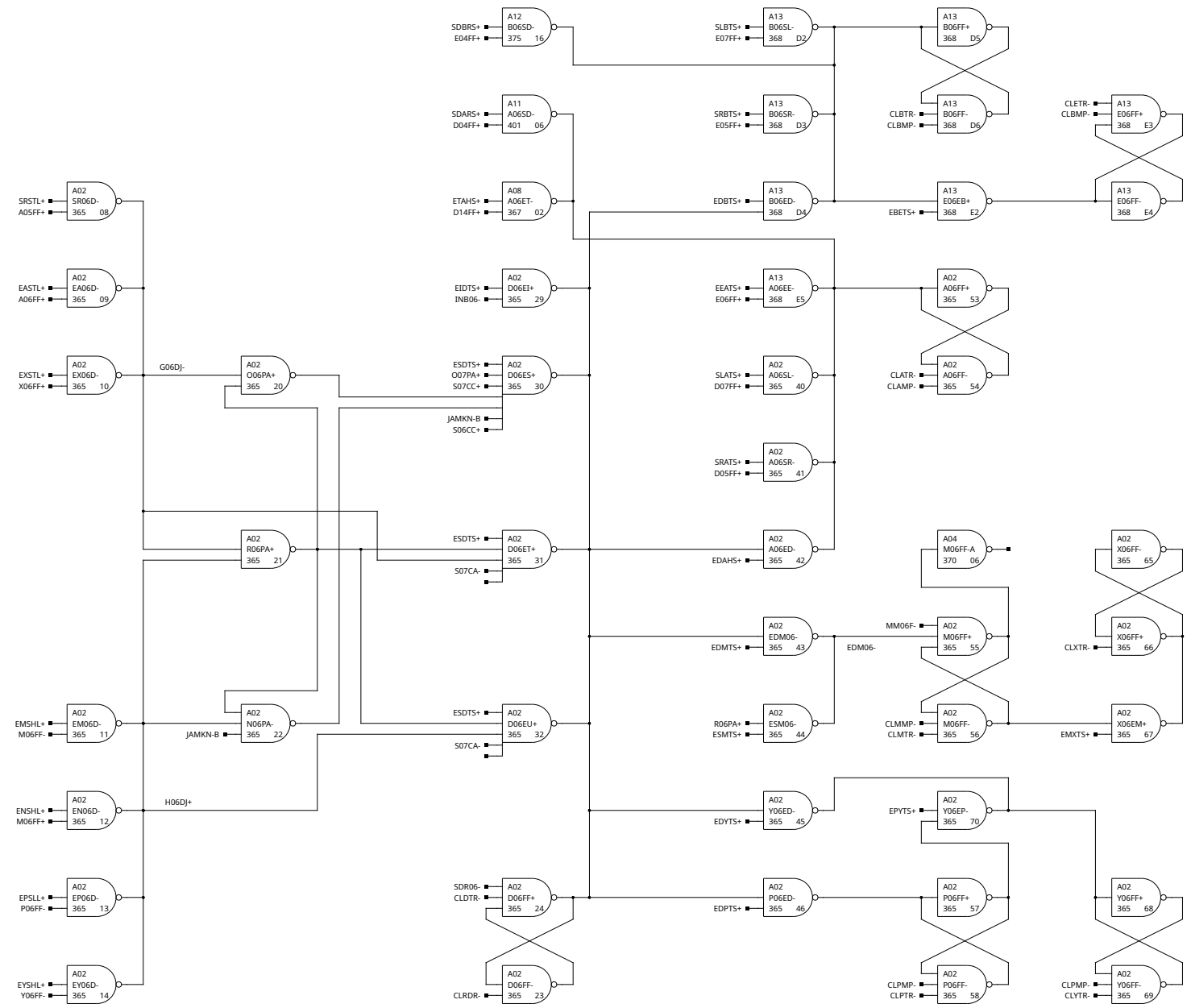

~~NOTES:~~

REV.	REVISIONS	CHK.
A	S. R. 54-3585	
B 1/19/70	ECO 7748 EXT CHANGES SEE ECO T.A.	

HONEYWELL INC
COMPUTER CONTROL DIVISION
Old Connecticut Path, Framingham, Mass

DR. D. HAMEL	DATE	
ENG. K. IZBICKI	11-26-68	
APP.	7-2-69	
PROJECT NO. 55202		

TITLE
H-316
COLUMN No. 6

SIZE C | DWG NO. 70024490 | REV. B