LBD NO. 0.108

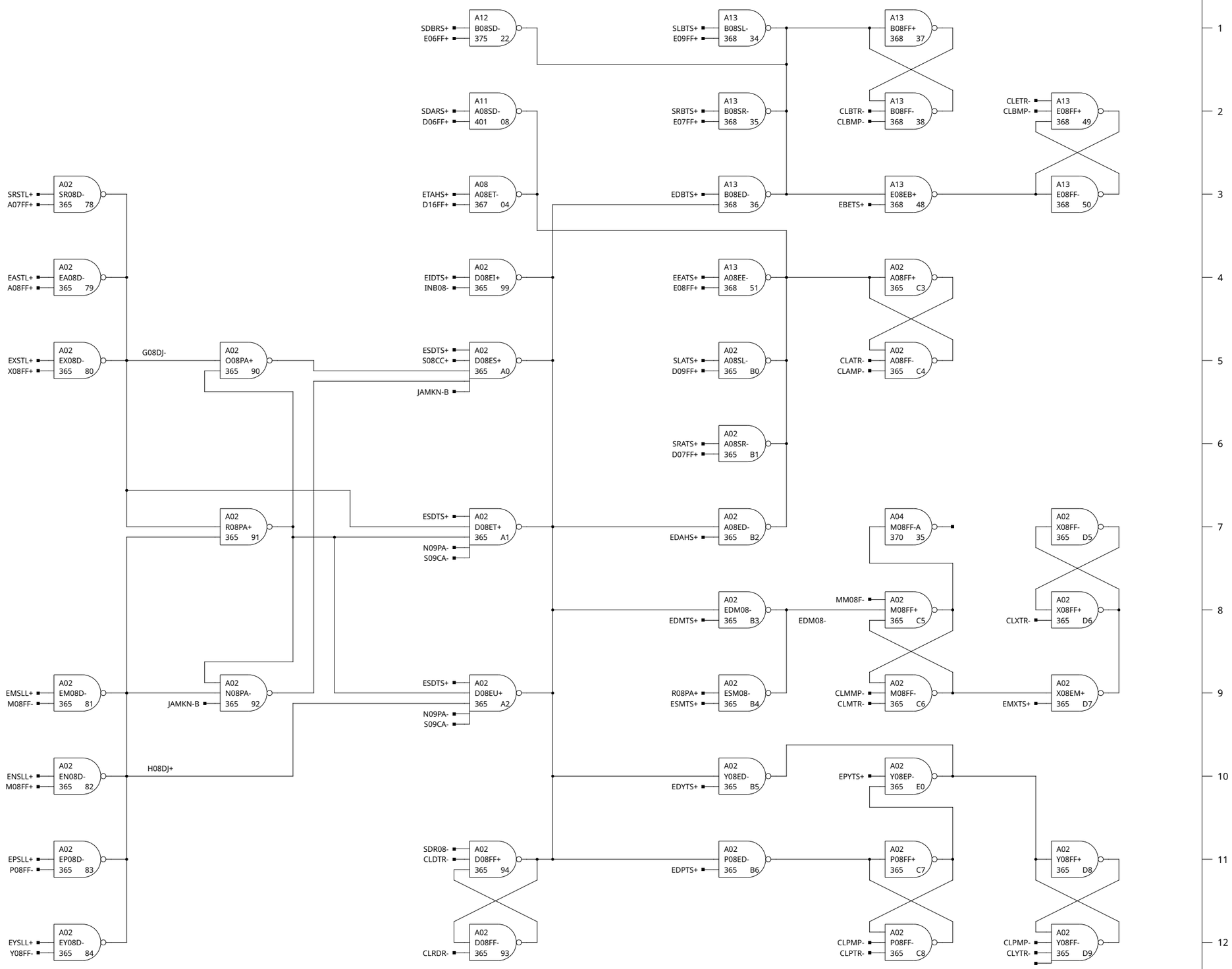

NOTES:

REV.	REVISIONS	CHK.	S. R. 54-3585
A			
B	ECO 7748 EXT CHANGES SEE ECO 1.A.	1/19/70	

HONEYWELL INC
COMPUTER CONTROL DIVISION
Old Connecticut Path, Framingham, Mass

DR. D. HAMEL	DATE	
ENG. K. IZBICKI	11-26-68	
APP.	7-2-69	
PROJECT NO. 55202		

TITLE
H-316
COLUMN No. 8

SIZE C | DWG NO. 70024492 | REV. B