LBD NO. 0.111

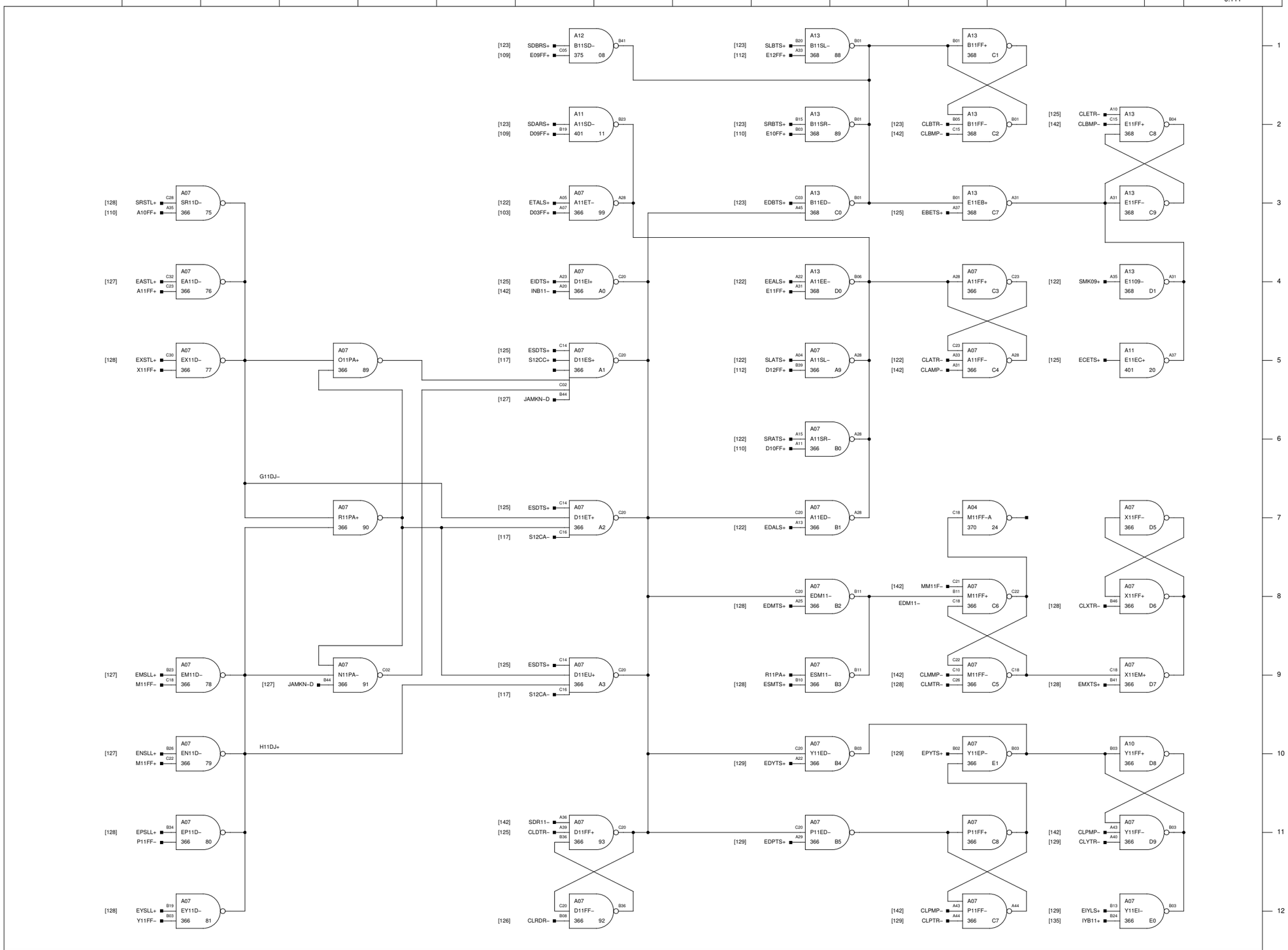

NOTES:

REV.	REVISIONS	CHK.
A	—	//
B 1/19/76	ECO 7748 EXT CHANGES SEE ECO T.A.	

S. R. 54–3585

HONEYWELL INC
COMPUTER CONTROL DIVISION
Old Connecticut Path, Framingham, Mass

DR. D. HAMEL	DATE	
ENG. K. IZBICKI	11–25–68	
APP.	7–2–69	
PROJECT NO. 55202		

TITLE
H–316
COLUMN No. 11

SIZE	DWG NO.	REV.
C	70024495	B