LBD NO. 0.112

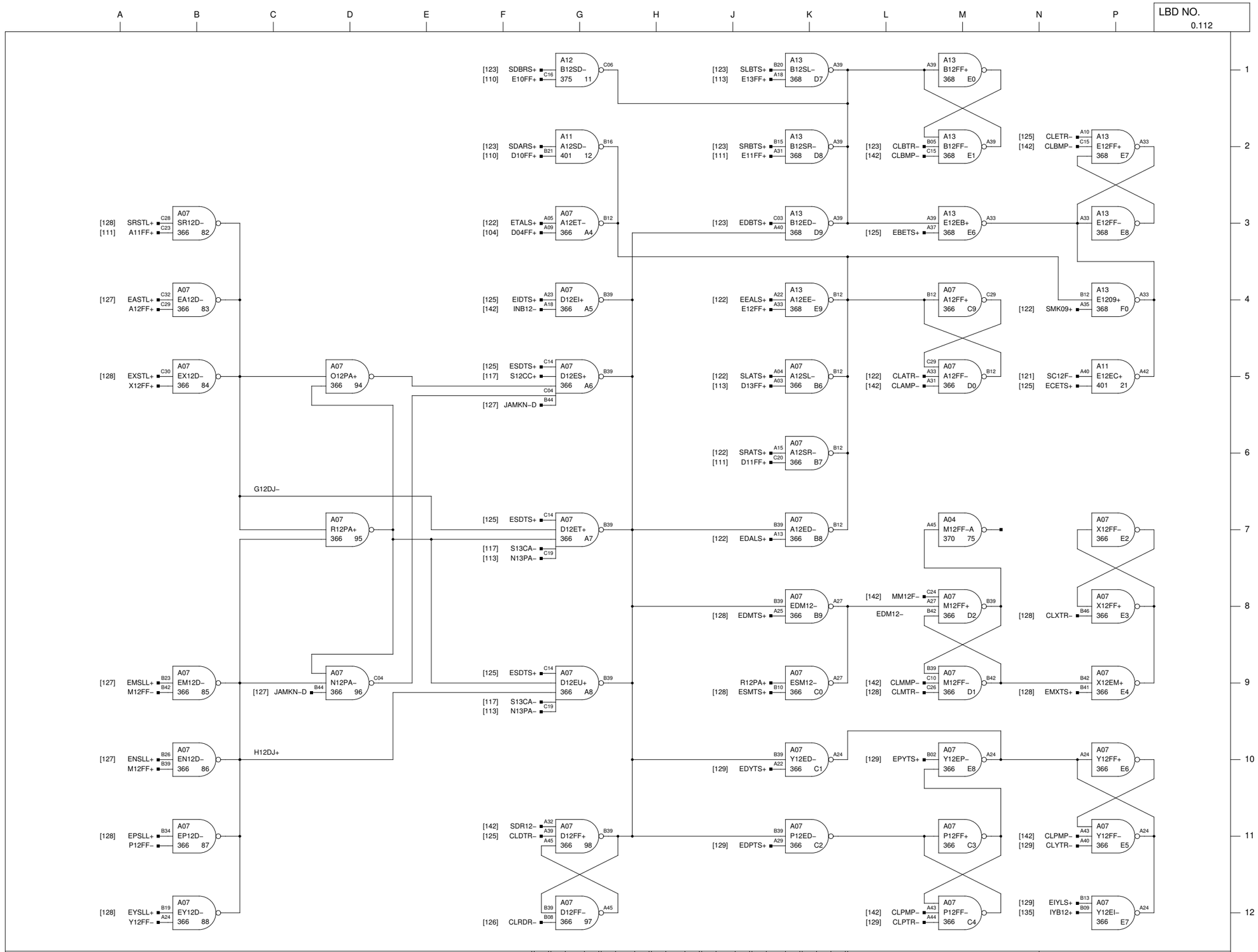

NOTES:

REVISIONS					
CHK.	REV.				
//	A	//	S. R. 54–3585	ECO 7748	B 1/19/70 EXT CHANGES SEE ECO T.A.

HONEYWELL INC
COMPUTER CONTROL DIVISION
Old Connecticut Path, Framingham, Mass

DR. D. HAMEL	DATE	
ENG. K. IZBICKI	11–26–68	
APP.	7–2–69	
PROJECT NO. 55202		

TITLE
H–316
COLUMN No. 12

SIZE	DWG NO.	REV.
C	70024496	B