LBD NO. 0.114

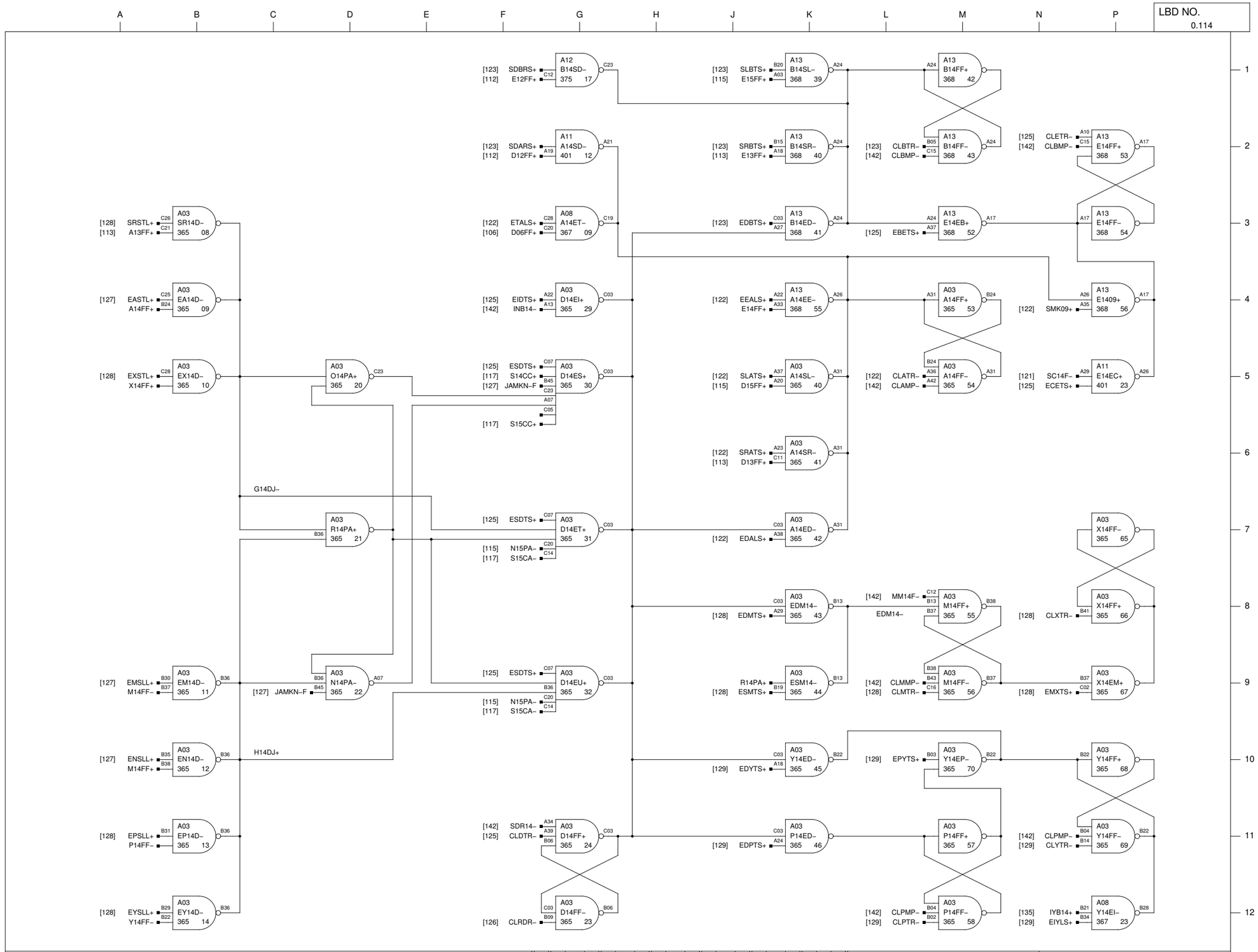

NOTES:

REVISIONS					
REV.	A		B	1/19/70	
CHK.	//	S. R. 54–3585	ECO 7748	EXT CHANGES SEE ECO T.A.	

HONEYWELL INC
COMPUTER CONTROL DIVISION
Old Connecticut Path, Framingham, Mass

	DATE
DR. D. HAMEL	
ENG. K. IZBICKI	11–26–68
APP.	7–2–69
PROJECT NO. 55202	

TITLE
H–316
COLUMN No. 12

SIZE	DWG NO.	REV.
C	70024498	B