LBD NO. 0.115

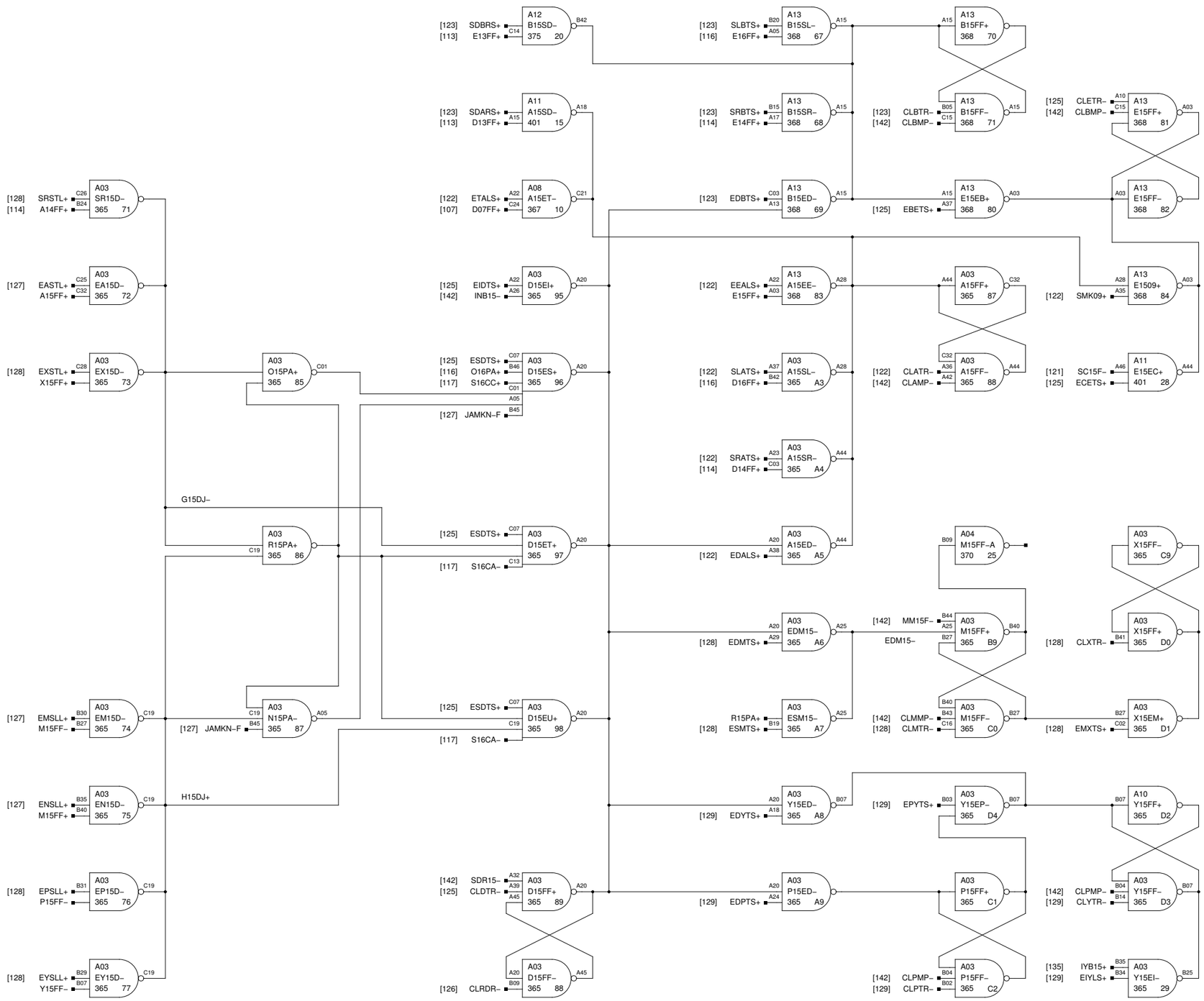

NOTES:

REV.	REVISIONS	CHK.
A	—	—
B	ECO 7748 EXT CHANGES SEE ECO T.A. 1/19/70	

S. R. 54–3585

HONEYWELL INC
COMPUTER CONTROL DIVISION
Old Connecticut Path, Framingham, Mass

		DATE
DR.	D. HAMEL	
ENG.	K. IZBICKI	11–26–68
APP.		7–2–69
PROJECT NO.	55202	

TITLE
H–316
COLUMN No. 15

SIZE	DWG NO.	REV.
C	70024499	B