LBD NO. 0.116

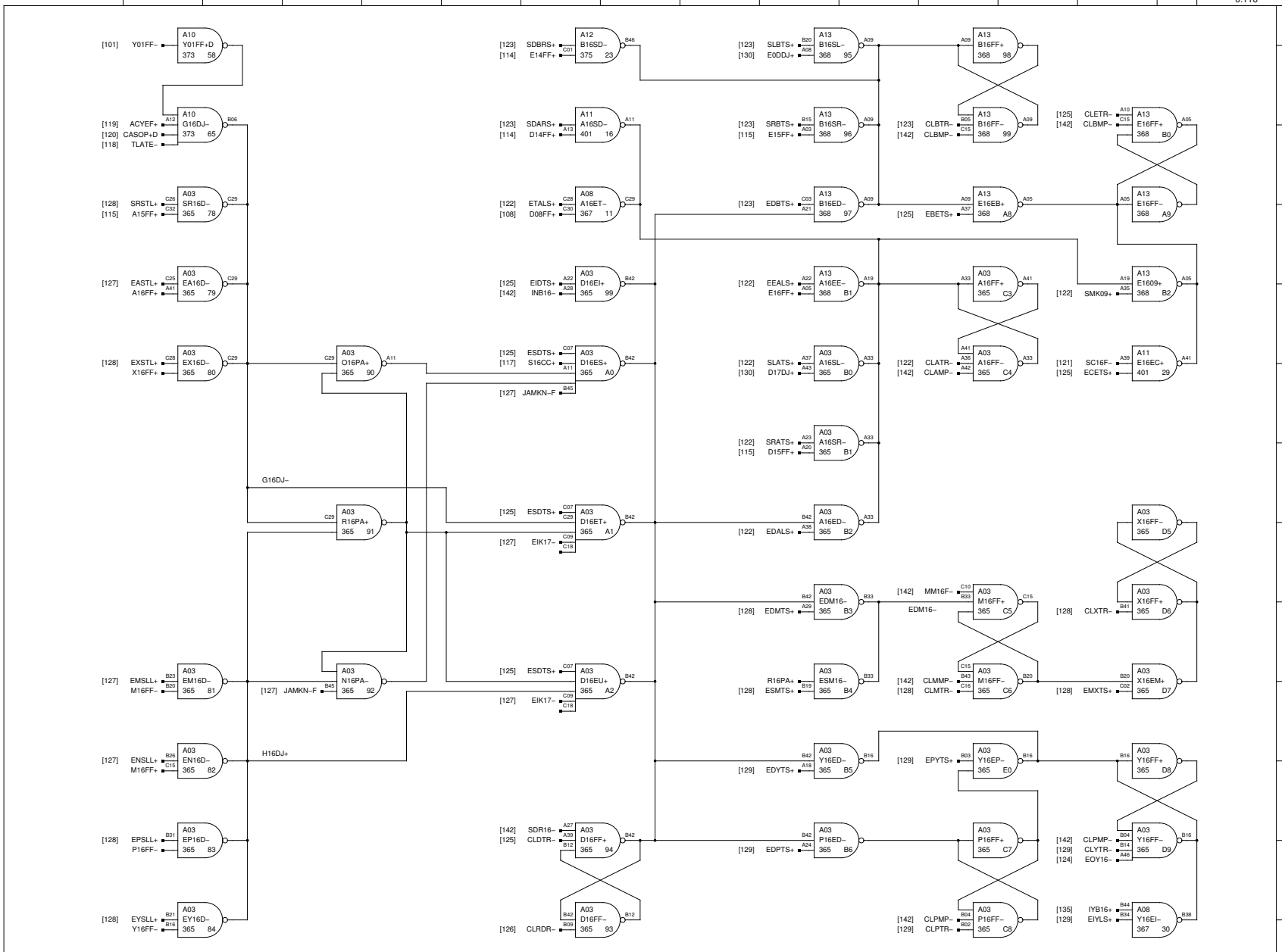

NOTES:

REV.	REVISIONS	CHK.
A	S. R. 54–3585	
B	ECO 7748 EXT CHANGES SEE ECO T.A. 1/19/70	

HONEYWELL INC
COMPUTER CONTROL DIVISION
Old Connecticut Path, Framingham, Mass

DR. D. HAMEL	DATE
ENG. K. IZBICKI	11–26–68
APP.	7–2–69
PROJECT NO. 55202	

TITLE
H–316
COLUMN No. 16

SIZE	DWG NO.	REV.
C	70024500	B