LBD NO. 0.117

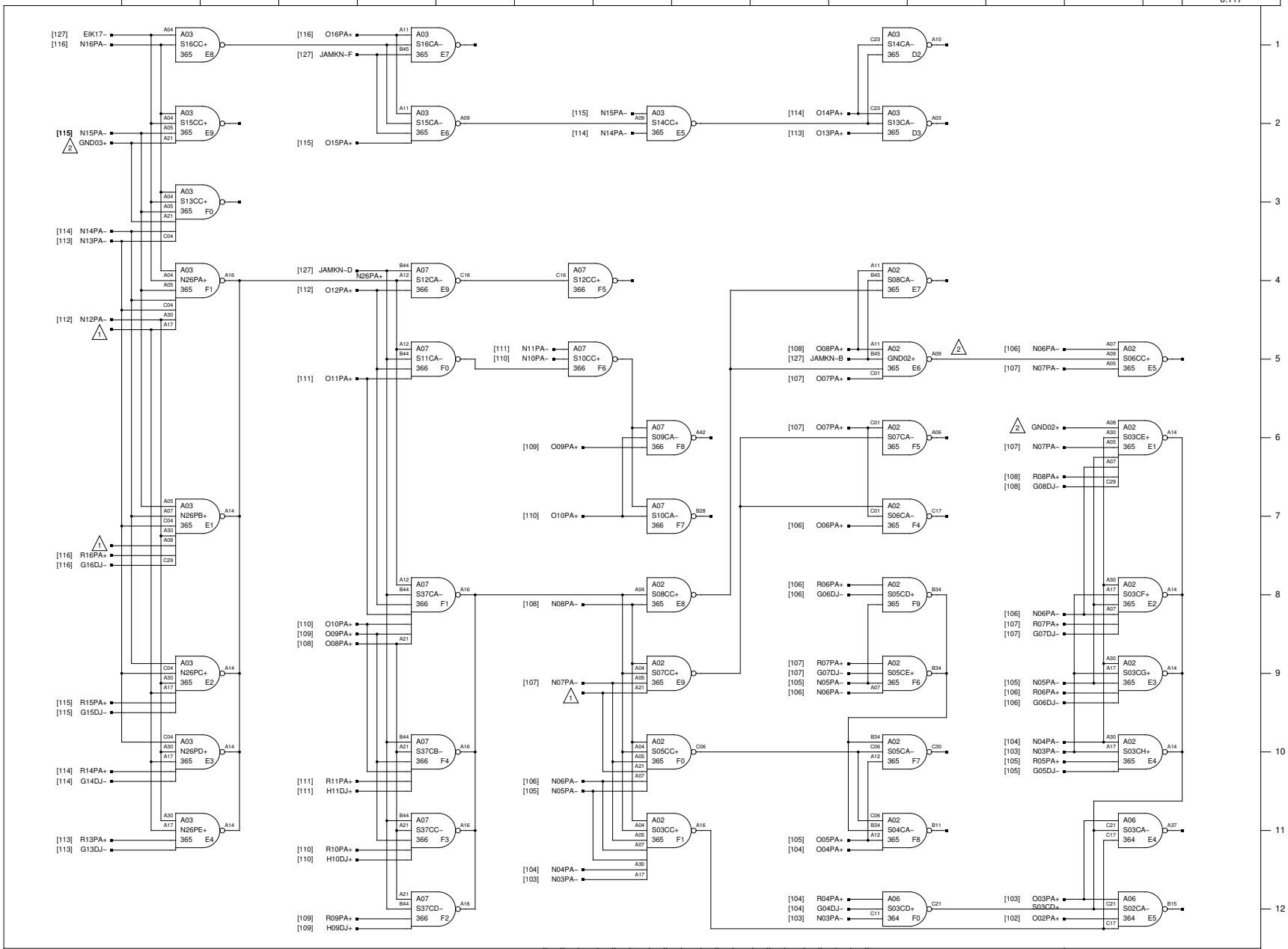

NOTES:

1. THESE PTS ARE FLOATING. THIS IS DUE TO THE DOUBLE USAGE OF CC365
2. THESE PTS ARE TIED TO THEIR PAC GROUNDS. THIS IS DUE TO THE DOUBLE USAGE OF CC365

REV.	REVISIONS	CHK.
A	S. R. 54–3585	
B	ECO 7748 — EXT CHANGES SEE ECO T.A. (1/19/70)	

HONEYWELL INC
COMPUTER CONTROL DIVISION
Old Connecticut Path, Framingham, Mass

DR. D. HAMEL	DATE	
ENG. K. IZBICKI	11–27–1968	
APP.	4–1–69	
PROJECT NO. 55202		

TITLE
H–316
CARRY NETWORK

SIZE	DWG NO.	REV.
C	70024501	B