LBD NO. 0.118

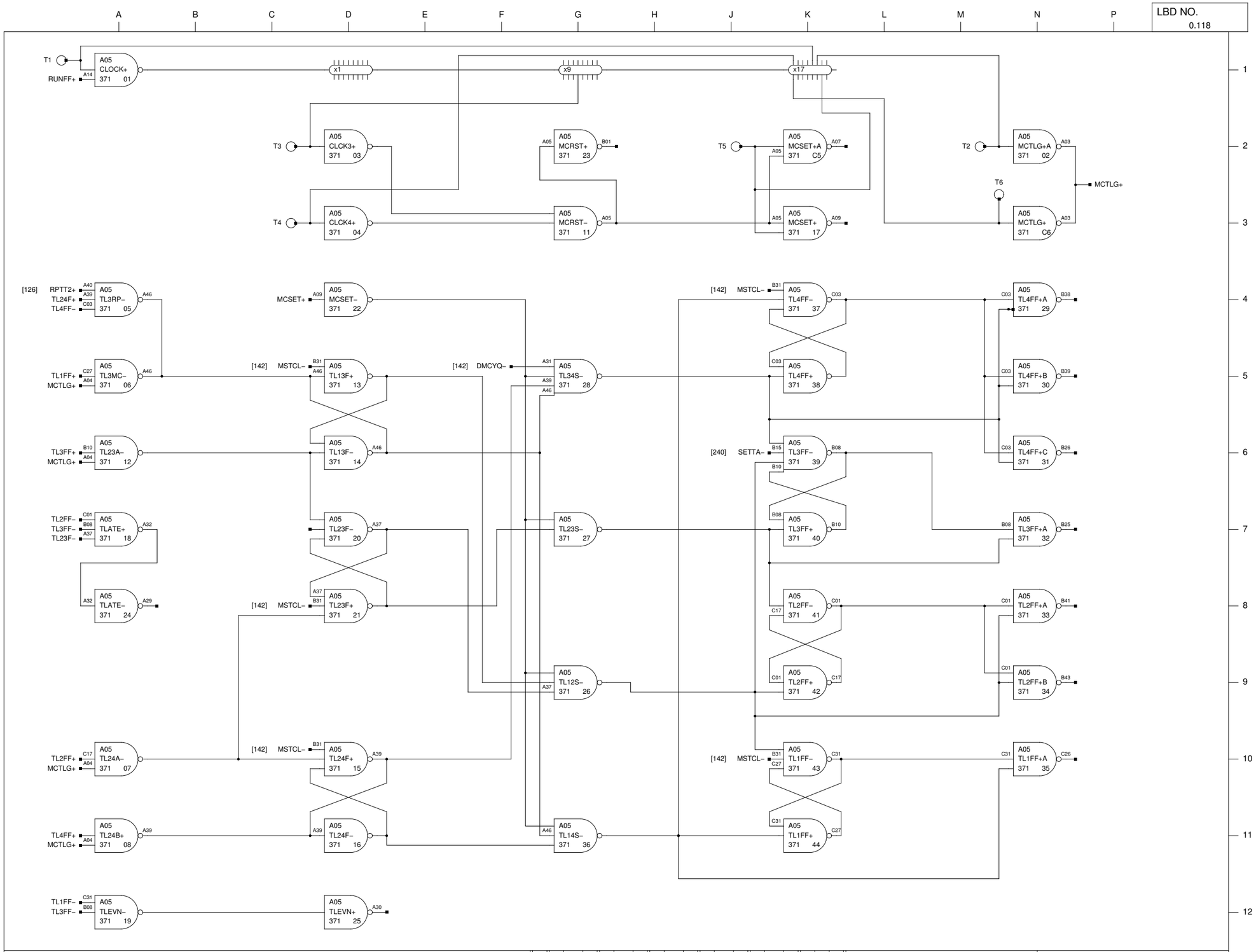

NOTES:

REV.	REVISIONS	CHK.
A	—	—
B	ECO 7748 EXT CHANGES SEE ECO T.A. 1/19/70	

S. R. 54−3585

HONEYW ELL INC
COMPUTER CONTROL DIVISION
Old Connecticut Path, Framingham, Mass

		DATE
DR.	D. HAMEL	
ENG.	K. IZBICKI	1−9−1969
APP.		7−2−69
PROJECT NO.	55202	

TITLE
H−316
TLG AND CLOCK

SIZE	DWG NO.	REV.
C	70024502	B