LBD NO. 0.118

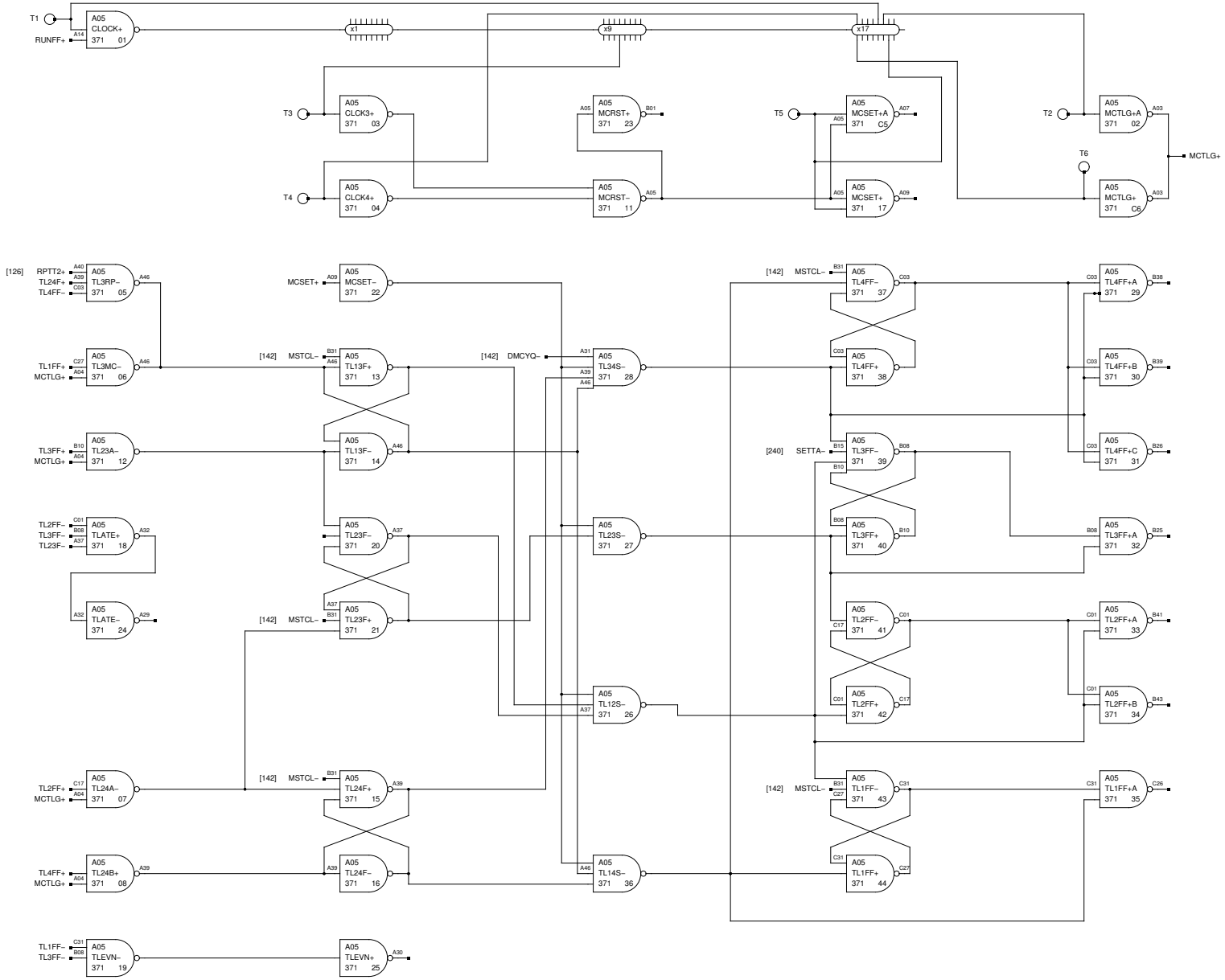

NOTES:

REV.	REVISIONS	CHK.
A	S. R. 54-3585	
B 1/19/70	ECO 7748 EXT CHANGES SEE ECO T.A.	

HONEYWELL INC
COMPUTER CONTROL DIVISION
Old Connecticut Path, Framingham, Mass

		DATE
DR.	D. HAMEL	
ENG.	K. IZBICKI	1-9-1969
APP.		7-2-69
PROJECT NO.	55202	

TITLE
H-316
TLG AND CLOCK

SIZE	DWG NO.	REV.
C	70024502	B