LBD NO. 0.120

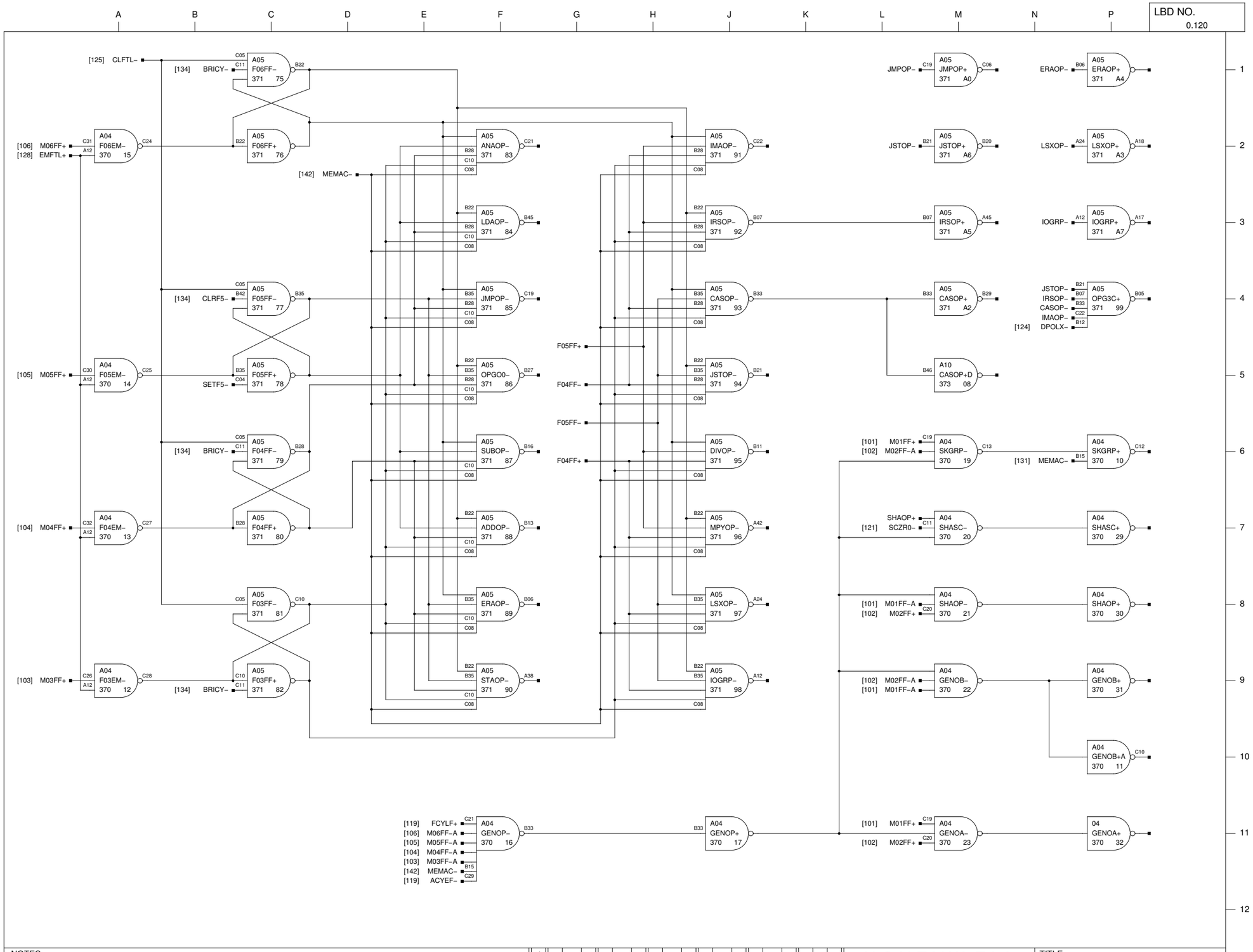

NOTES:

REV.	REVISIONS	CHK.
A		

S. R. 54–3585

B	ECO 7748	1/19/70
	EXT CHANGES SEE ECO T. A.	

HONEYWELL INC
COMPUTER CONTROL DIVISION
Old Connecticut Path, Framingham, Mass

DR. D. HAMEL	DATE	
ENG. K. IZBICKI	13–12–68	
APP.	17–2–69	
PROJECT NO. 55202		

TITLE
H–316
F REG & OP DECODE

SIZE	DWG NO.	REV.
C	70024504	B