LBD NO. 0.122

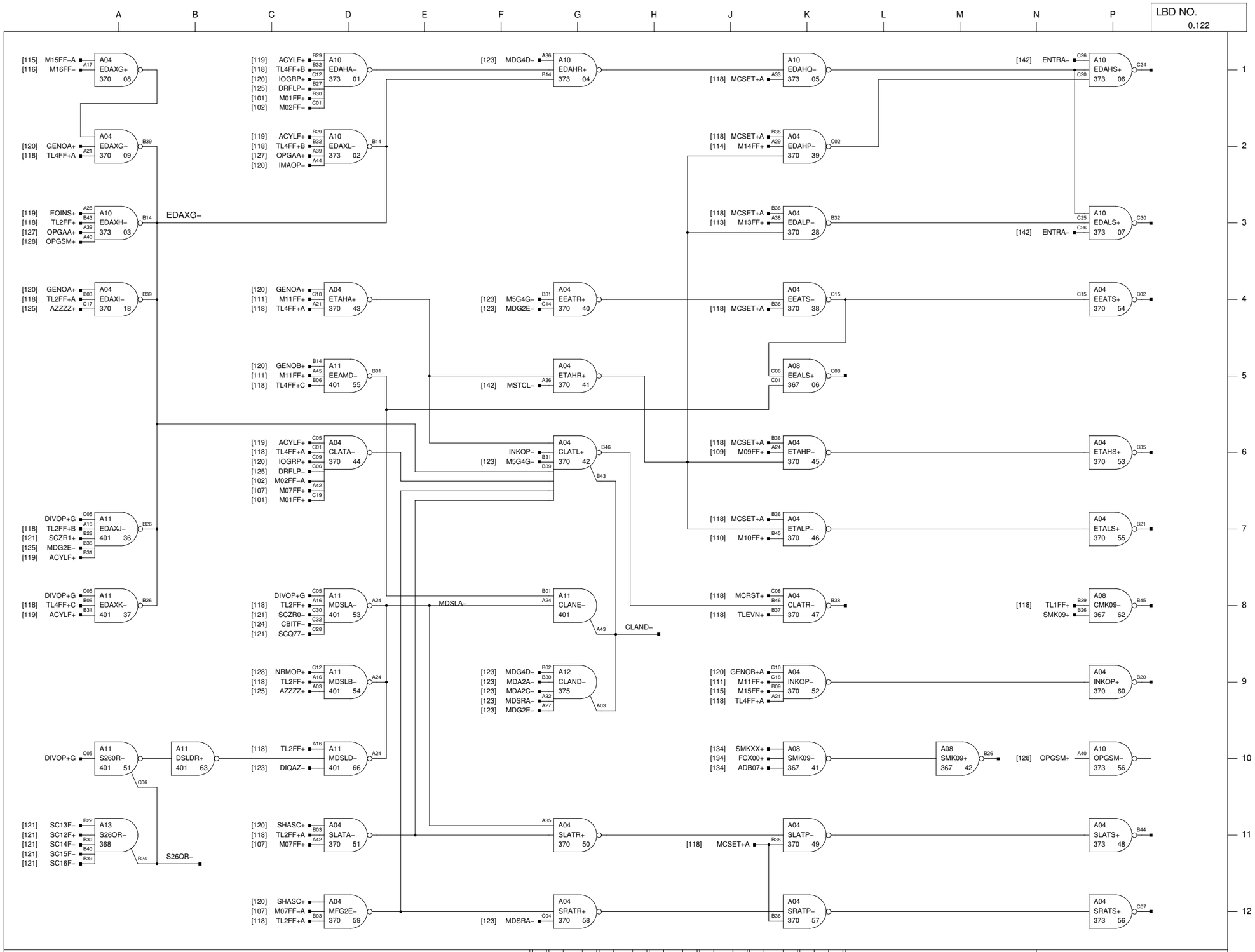

NOTES:

REV.	REVISIONS	CHK.
A	S. R. 54–3585	
B	ECO 7748 EXT CHANGES SEE ECO T.A. 1/19/70	

HONEYWELL INC
COMPUTER CONTROL DIVISION
Old Connecticut Path, Framingham, Mass

DR. D. HAMEL	DATE	
ENG. K. IZBICKI	12–23–68	
APP.	7–2–69	
PROJECT NO. 55202		

TITLE
H–316
CONTROL LOGIC A

SIZE	DWG NO.	REV.
C	70024506	B