LBD NO. 0.124

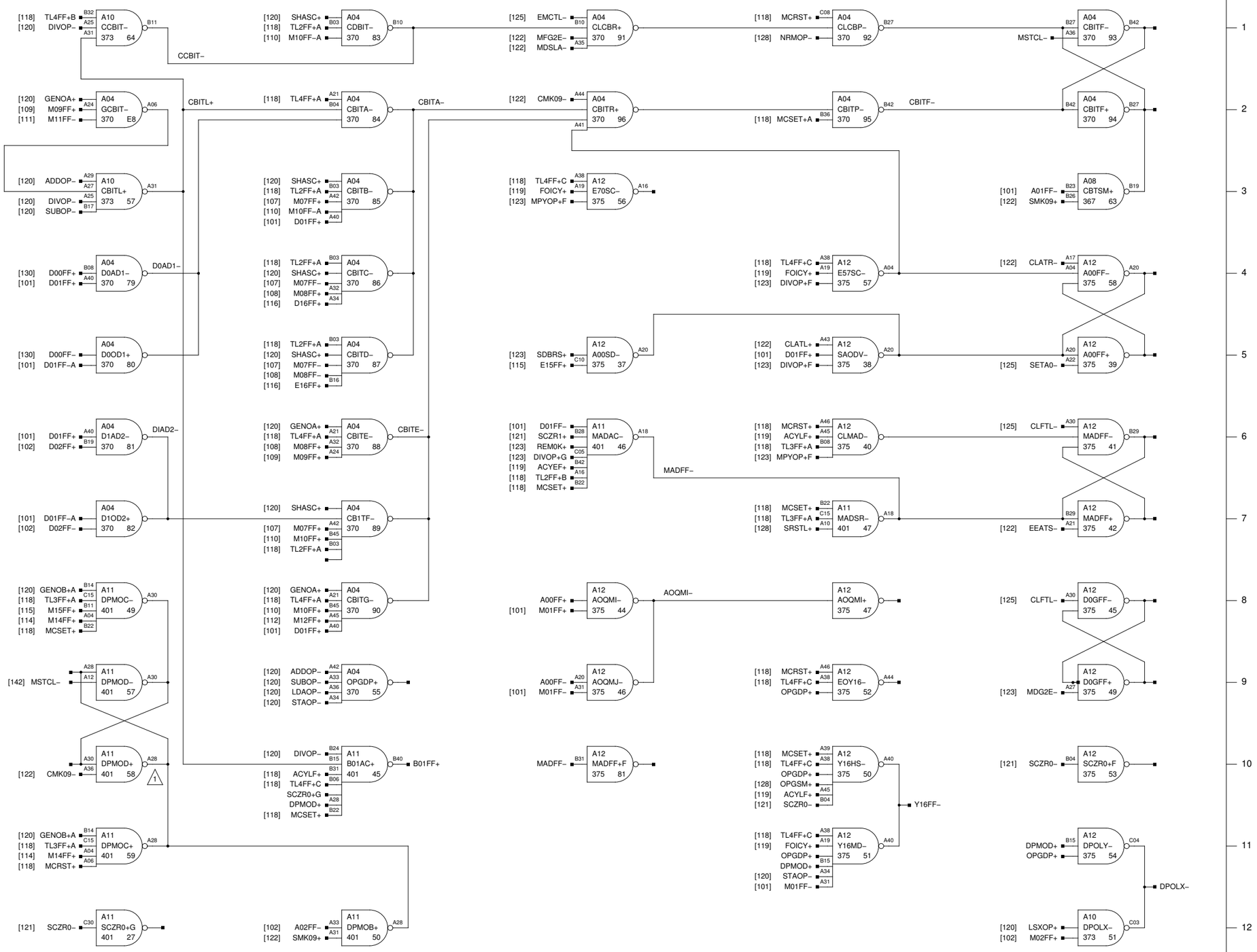

NOTES:

1. THIS PT. IS GND WITH NO HSA OPTION

REVISIONS	REV.	
	A	S. R. 54–3585
	B	ECO 7748 1/19/70 EXT CHANGES SEE ECO T.A.

CHK. —//—

HONEYWELL INC
COMPUTER CONTROL DIVISION
Old Connecticut Path, Framingham, Mass

DR. D. HAMEL	DATE	
ENG. K. IZBICKI	1–13–1969	
APP.	7–2–69	
PROJECT NO. 55202		

TITLE
H–316
CONTROL LOGIC C

SIZE	DWG NO.	REV.
C	70024508	B