LBD NO. 0.126

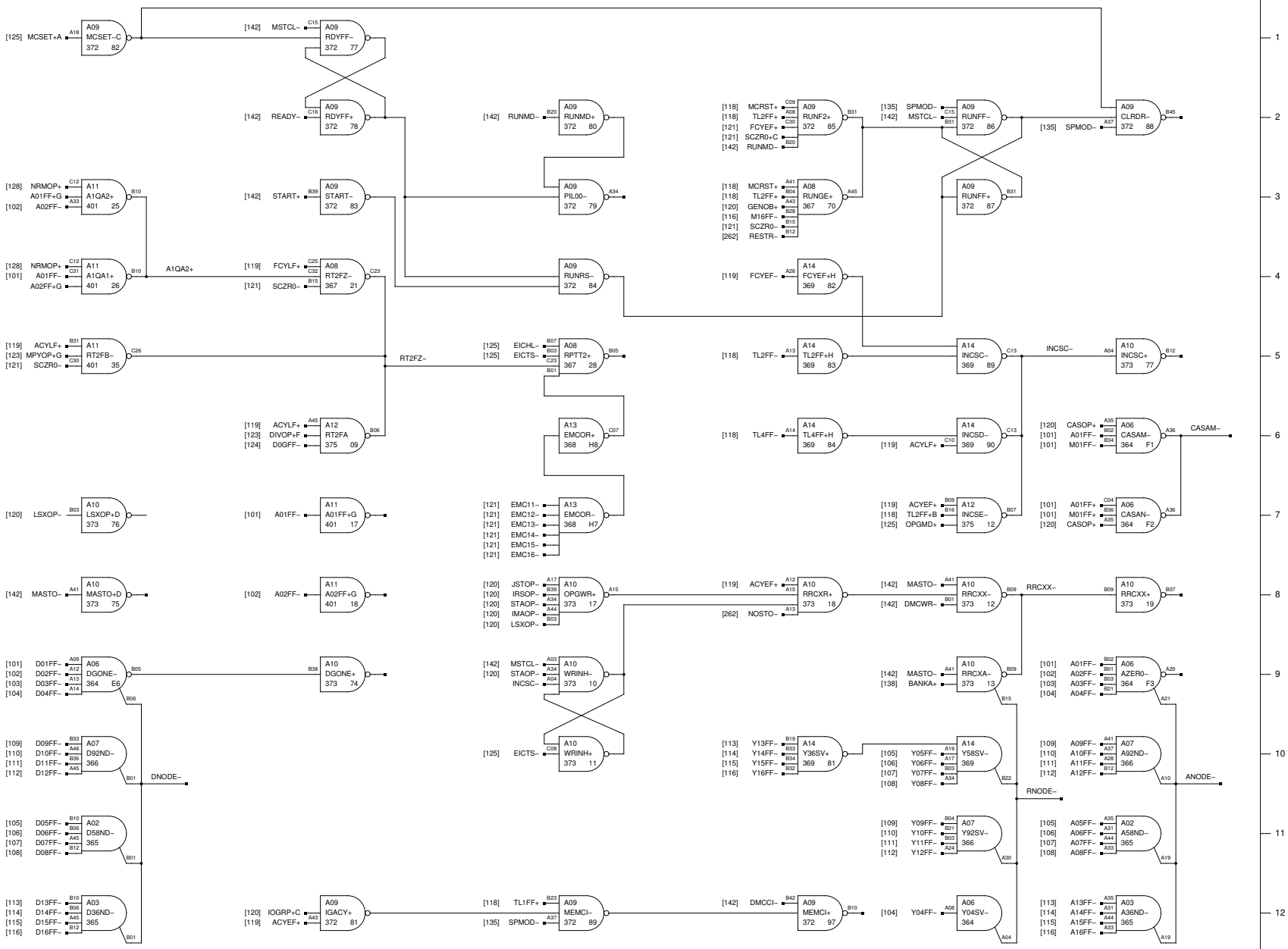

NOTES:

REV.	REVISIONS	CHK.	
A	S. R. 54–3585		
B	ECO 7748 — EXT CHANGES SEE ECO T.A.		1/19/70

HONEYWELL INC
COMPUTER CONTROL DIVISION
Old Connecticut Path, Framingham, Mass

DR. D. HAMEL	DATE	
ENG. K. IZBICKI	1–2–1969	
APP.	7–2–69	
PROJECT NO. 55202		

TITLE
H–316
CONTROL LOGIC H

SIZE	DWG NO.	REV.
C	70024510	B