LBD NO. 0.128

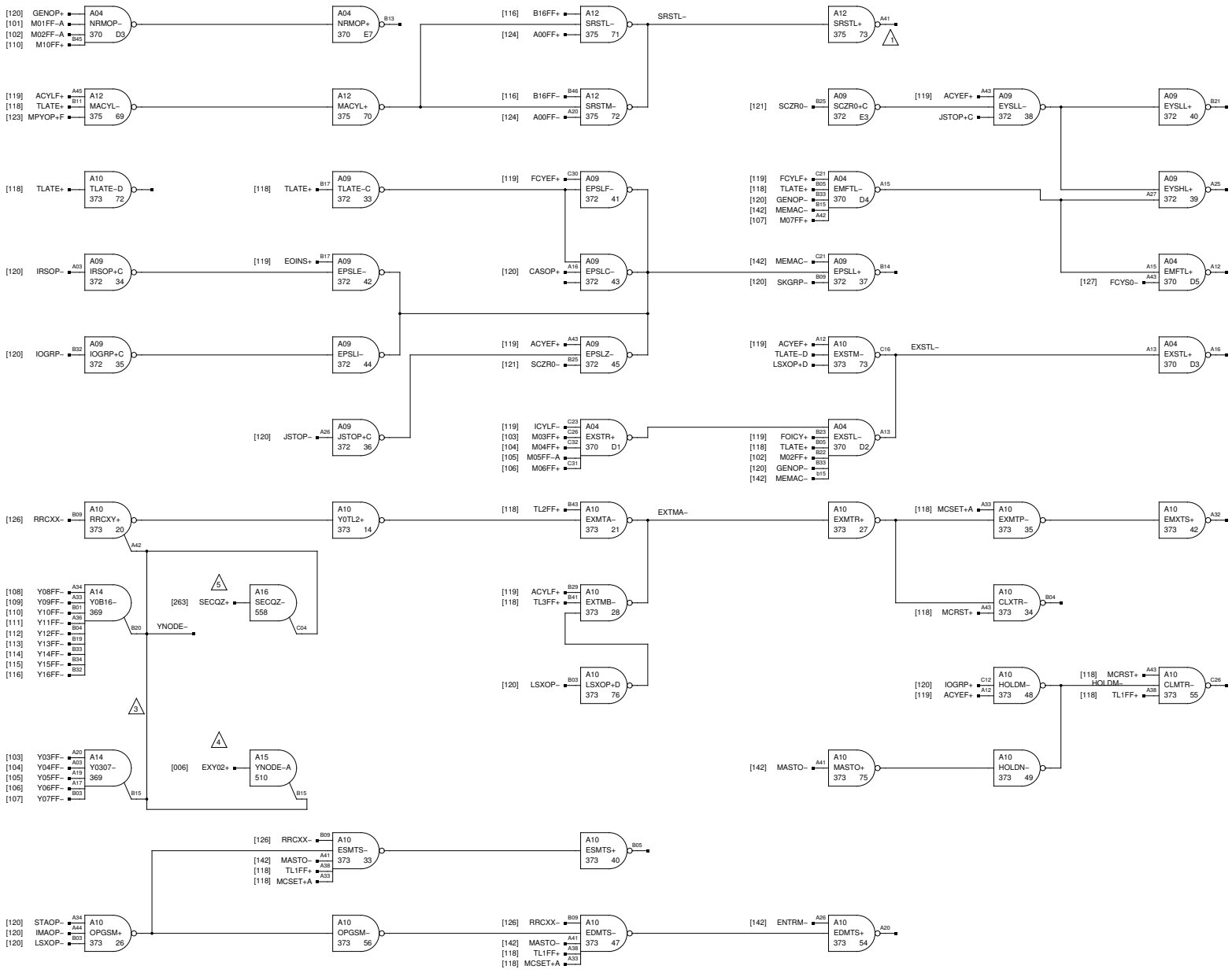

NOTES:

1. THIS PT IS TIED TO GND WITH NO HSA OPTION
2. DELETE M02FF+ AND ADD M02DJ+ WITH EXT ADD OPTION
3. DISCONNECT THIS WIRE IF MLO(316–08) IS INSTALLED
4. THIS GATE INCLUDED ONLY IF MLO (316–08) IS INSTALLED
5. THIS GATE IS INCLUDED ONLY IF MLO (316–08) IS INSTALLED

REV.	REVISIONS	CHK.
A	S. R. 54–3585	
B	ECO 7748 EXT CHANGES SEE ECO T.A. 1/19/70	

HONEYWELL INC
COMPUTER CONTROL DIVISION
Old Connecticut Path, Framingham, Mass

DR. D. HAMEL	DATE	
ENG. K. IZBICKI	12–26–1968	
APP.	.	
PROJECT NO. 55202		

TITLE
H–316
CONTROL LOGIC MX

SIZE	DWG NO.	REV.
C	70024512	B