LBD NO. 0.135

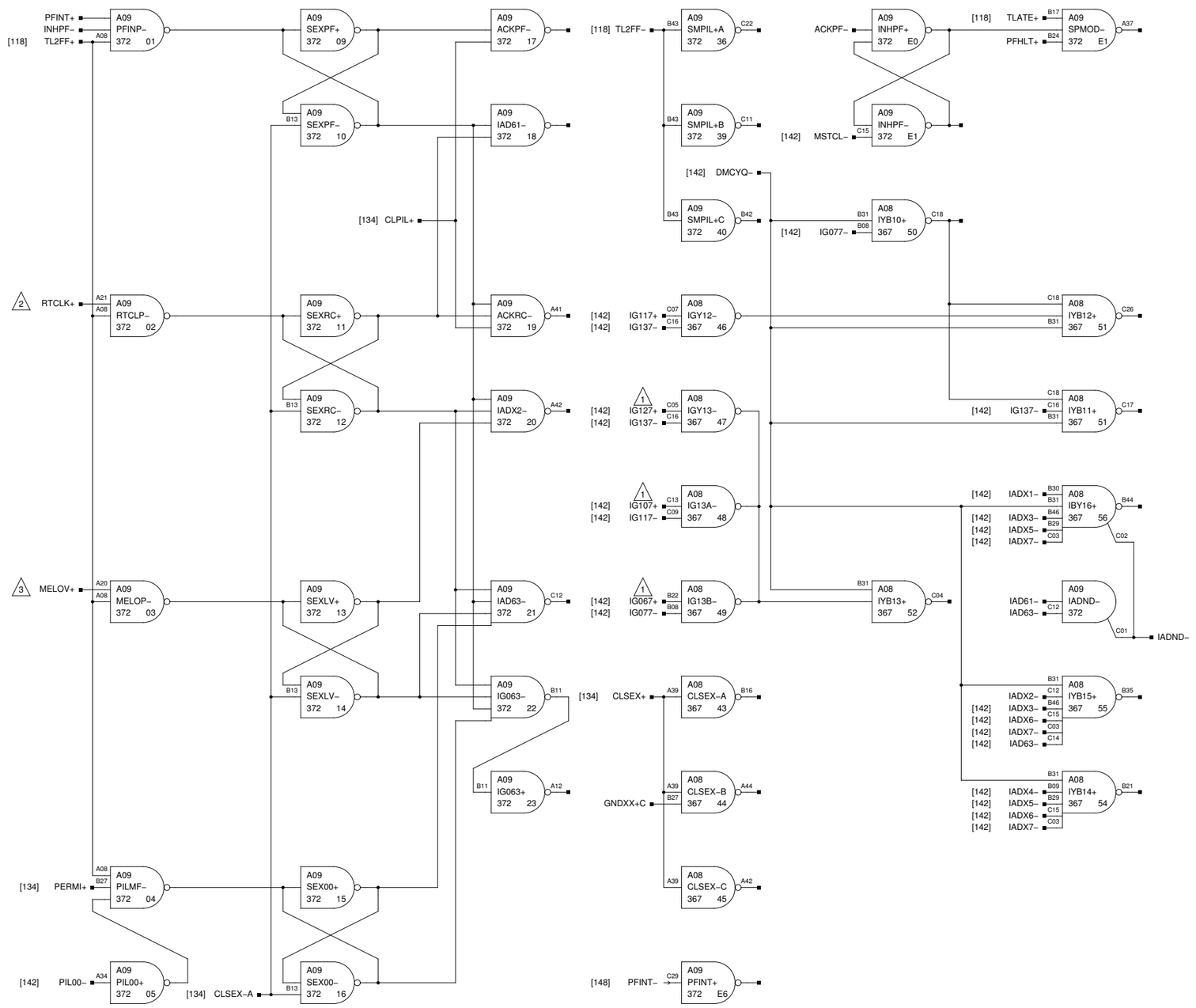

NOTES:

1. THIS PT IS GND WITH NO PI OPTION
2. THIS PT IS GND WITH NO RTC OPTION
3. THIS PT IS GND WITH NO M.L. OPTION

REV.	REVISIONS	CHK.
A	—	—
B	ECO 7748 EXT CHANGES SEE ECO T.A. 1/19/70	

S. R. 54–3585

HONEYWELL INC
COMPUTER CONTROL DIVISION
Old Connecticut Path, Framingham, Mass

DR. J D GILMARTIN	DATE	
ENG. K. IZBICKI	1–9–1969	
APP.	7–2–69	
PROJECT NO. 55202		

TITLE
H–316
INTERRUPT ADDRESS ENCODING

SIZE	DWG NO.	REV.
C	70024518	B