LBD NO. 0.136

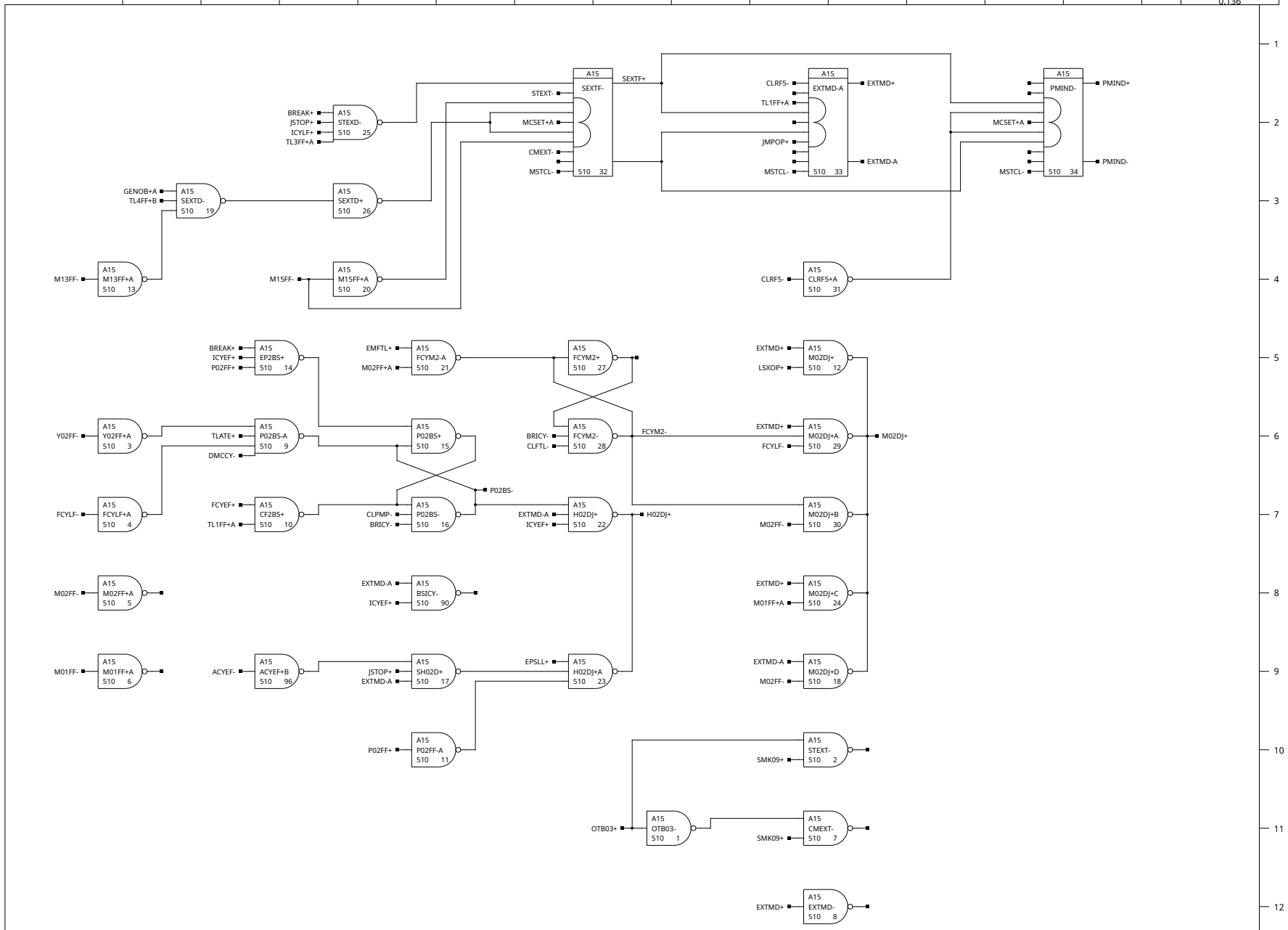

~~NOTES:~~

REV.	A
REVISIONS	—
CHK.	—

S. R. 54-3915

HONEYWELL INC
COMPUTER CONTROL DIVISION
Old Connecticut Path, Framingham, Mass

DR. D. HAMEL	DATE	
ENG. R. ALBRIGHT	5-16-1969	
APP.		
PROJECT NO. 53217		

TITLE
H-316
MEMORY EXPANSION
CONTROL LOGIC

SIZE	DWG NO.	REV.
C	70025829	A