LBD NO. 0.147

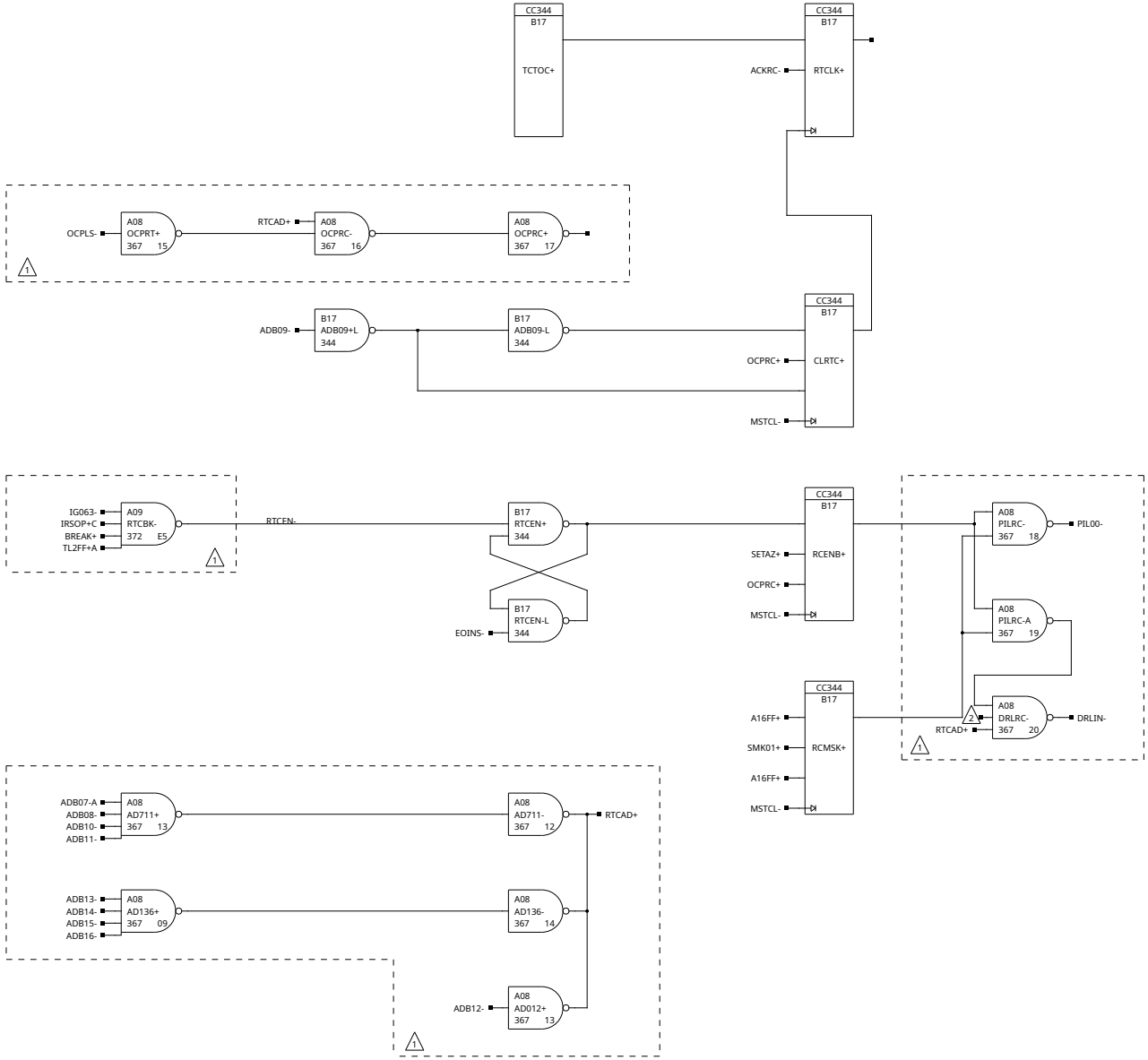

NOTES:

1. THESE CIRCUITS ALSO SHOWN ON L.B.D. 0.119
2. REMOVE GND WHEN USING RTC

REV.	REVISIONS	CHK.	S. R. 54-3585	ECO7748	EXT CHANGES SEE ECO 1A.
A	—	—		B	1/19/70

HONEYWELL INC
COMPUTER CONTROL DIVISION
Old Connecticut Path, Framingham, Mass

		DATE
DR.	D. HAMEL	
ENG.	K. IZBICKI	2-27-69
APP.		4/10/69
PROJECT NO.	55202	

TITLE
H-316-12
REAL TIME CLOCK

SIZE C | DWG NO. 70024524 | REV. B