LBD NO. 0.150

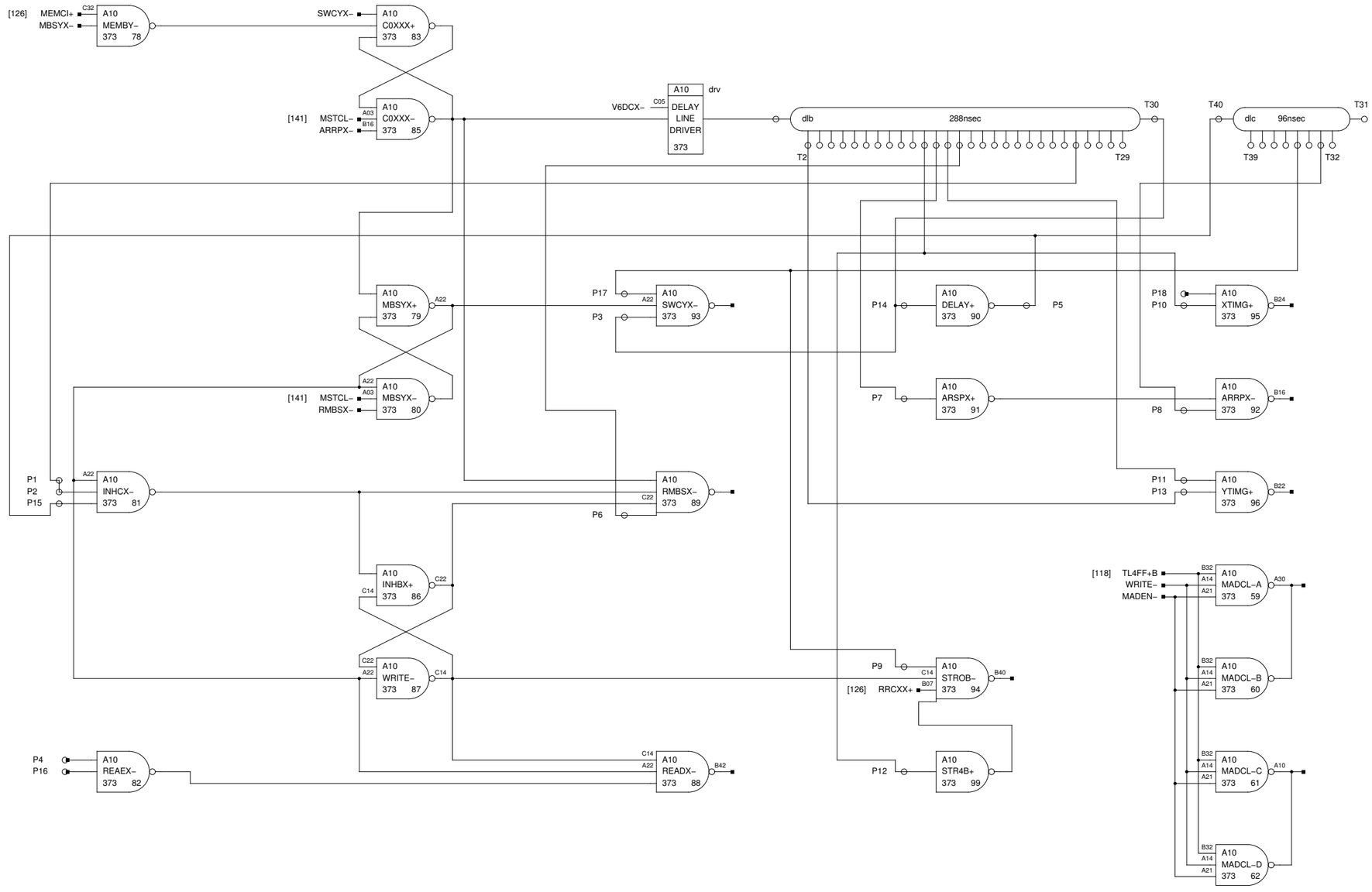

NOTES:

REV.	REVISIONS	CHK.	
A	—	—	S. R. 54–3585
B	ECO 7748		EXT CHGS SEE ECO AD

HONEYWELL INC
COMPUTER CONTROL DIVISION
Old Connecticut Path, Framingham, Mass

DR. D. HAMEL	DATE	
ENG. K. IZBICKI	1–21–1969	
APP.	7–2–69	
PROJECT NO. 55202		

TITLE
H–316
TIMING & CONTROL

SIZE	DWG NO.	REV.
C	70024529	B