LBD NO. 0.233

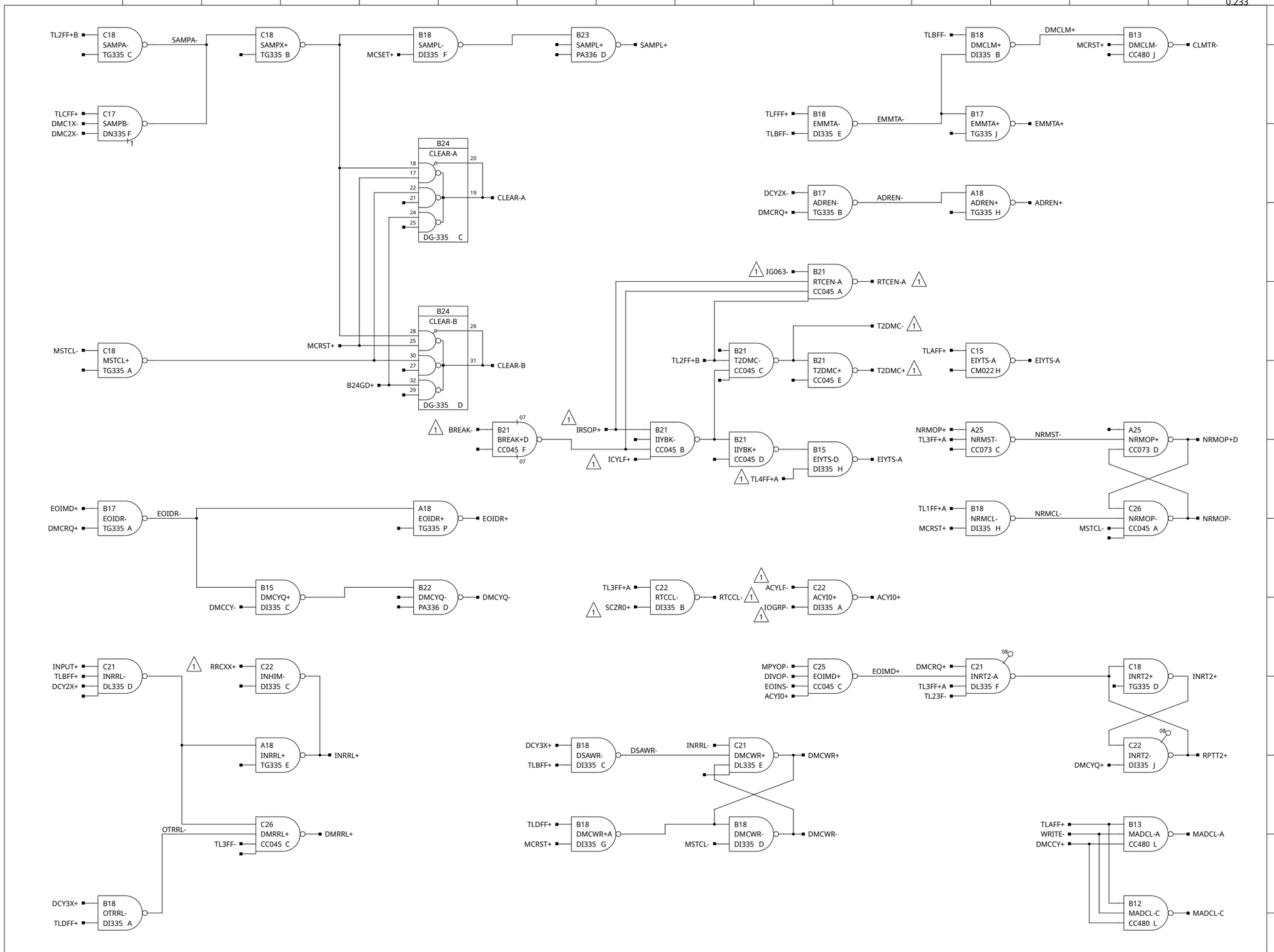

NOTES:

1. SEE MAINFRAME COVER SHEET NOTE 9A

REV.	REVISIONS	CHK.
A	PER S.R. 54-3785	—
B	ECO 7904 EXT. CHANGES SEE ECO A.K. 1/8/70	
C	ECO 9425 EXT. CHANGES SEE ECO S.S.R. 5/11/71	
D	ECO 10168 S.S.R. SEE ECO 2/3/72	
E	ECO 20704 T.L.B. SEE ECO 12/06/72	

HONEYWELL INC
COMPUTER CONTROL DIVISION
Old Connecticut Path, Framingham, Mass

DR. A. KMICINSKI	DATE 7/1/69	
ENG. K. ROY	8-22-69	
APP.	8-22-69	
PROJECT NO. 53202		

TITLE
H-316 SDMC
CONTROL

SIZE	DWG NO.	REV.
C	70025580	E