LBD NO. 0.234

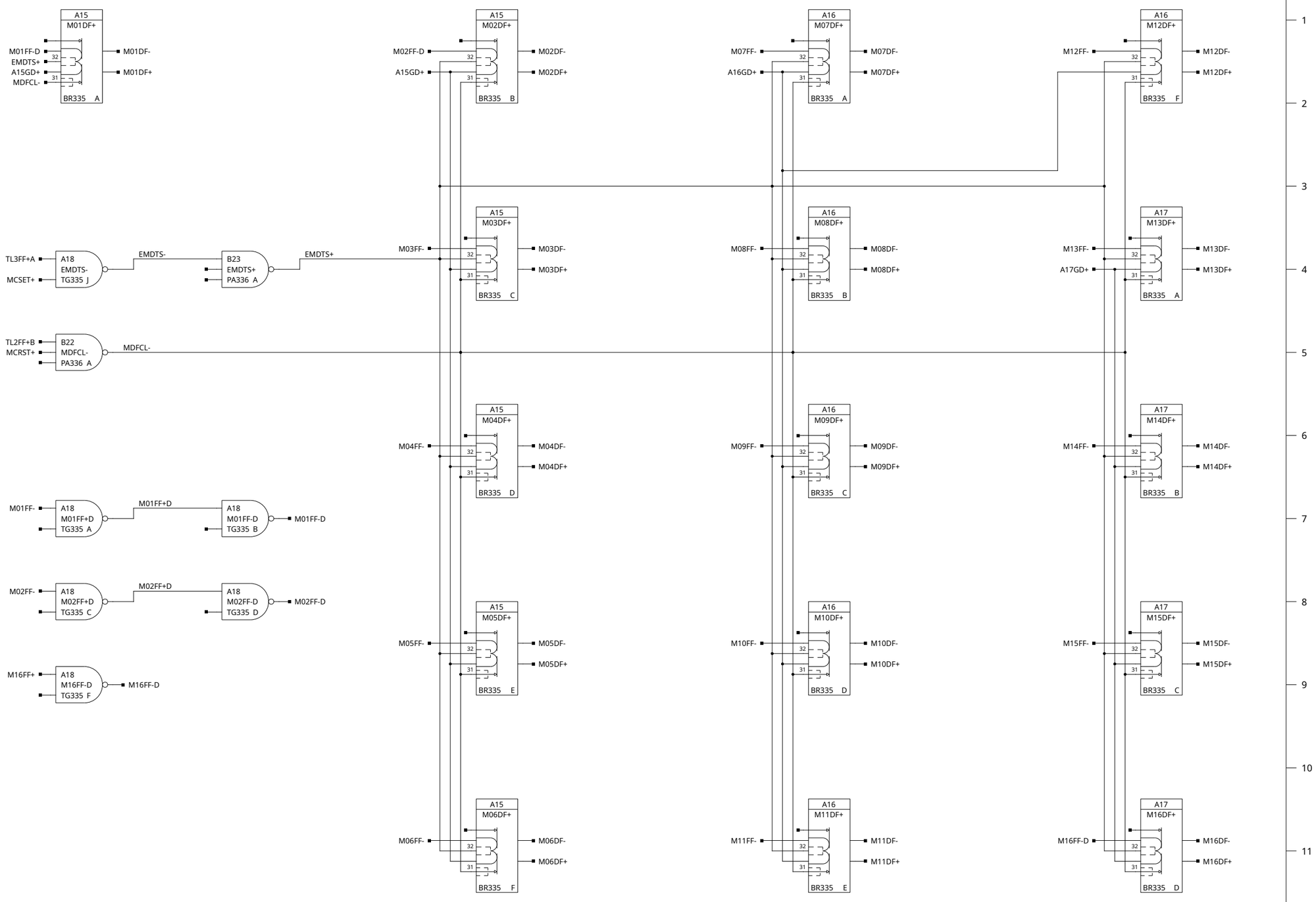


~~NOTES:~~

| REV. | REVISIONS | CHK. |
|---|---|---|
| A | PER S. R. 54-3788 | |

HONEYWELL INC
COMPUTER CONTROL DIVISION
Old Connecticut Path, Framingham, Mass

| | | |
|---|---|---|
| DR. A. KMICINSKI | DATE 6/30/69 | |
| ENG. K. ROY | 8-22-69 | |
| APP. | 8-22-69 | |
| PROJECT NO. 53202 | | |

TITLE
H-316 SDMC
M-REG STORAGE

| SIZE | DWG NO. | REV. |
|---|---|---|
| C | 70025581 | A |