LBD NO. 0.236

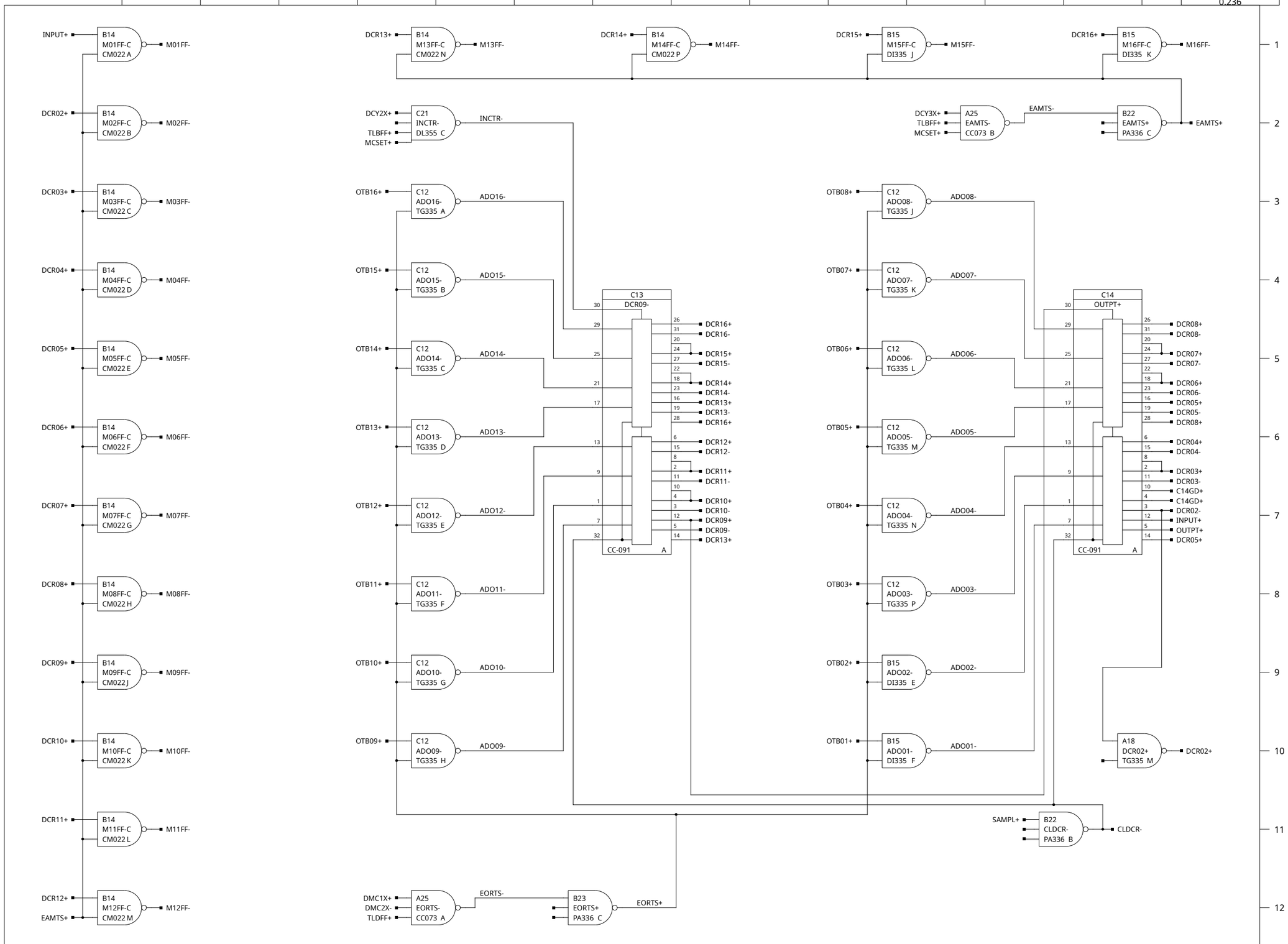

NOTES:

REV.	REVISIONS	CHK.
A	PER S. R. 54 . 3788	
B	ECO #31864 PER CH 12/15/73 EAC	

HONEYWELL INC
COMPUTER CONTROL DIVISION
Old Connecticut Path, Framingham, Mass

DR. A. KMICINSKI	DATE 7/3/69	
ENG. K. ROY	8-22-69	
APP.	8-22-69	
PROJECT NO. 53202		

TITLE
H-316 SDMC
ADDRESS REG.

SIZE	DWG NO.	REV.
C	70025583	B