LBD NO. 0.237

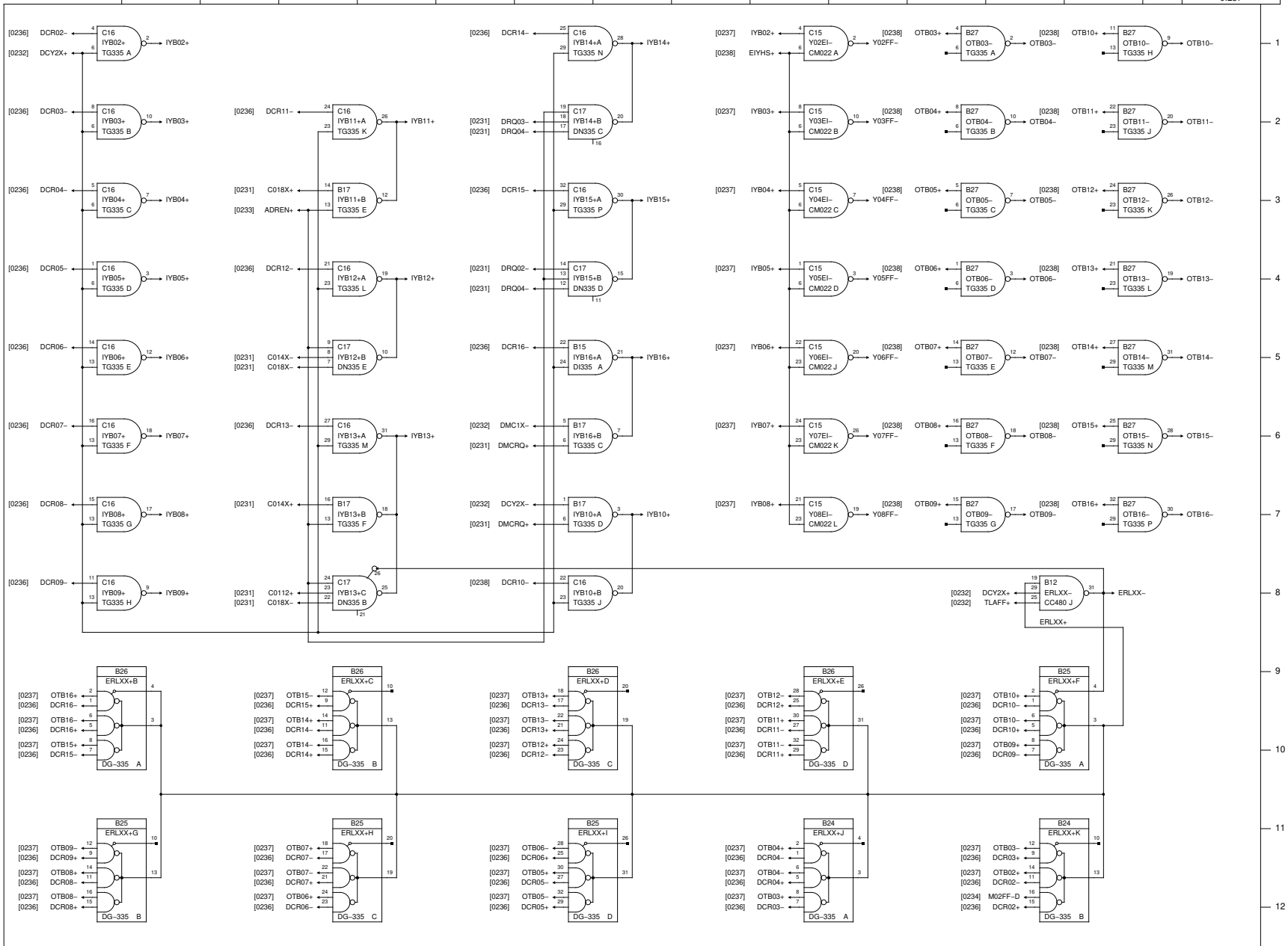

NOTES:

REV.	REVISIONS	OK.
A	PER S. R. 54 .3788	
B	ECO 10168 SEE ECO 23/72 S.S.R.	

HONEYWELL INC
COMPUTER CONTROL DIVISION
Old Connecticut Path, Framingham, Mass

DR. A. KMICINSKI	DATE 7/7/69	
ENG. K. ROY	8–22–69	
APP.	8–22–69	
PROJECT NO. 53202		

TITLE
H–316 SDMC
COMPARATOR/IYB

SIZE	DWG NO.	REV.
C	70025584	B