LBD NO. 0.262

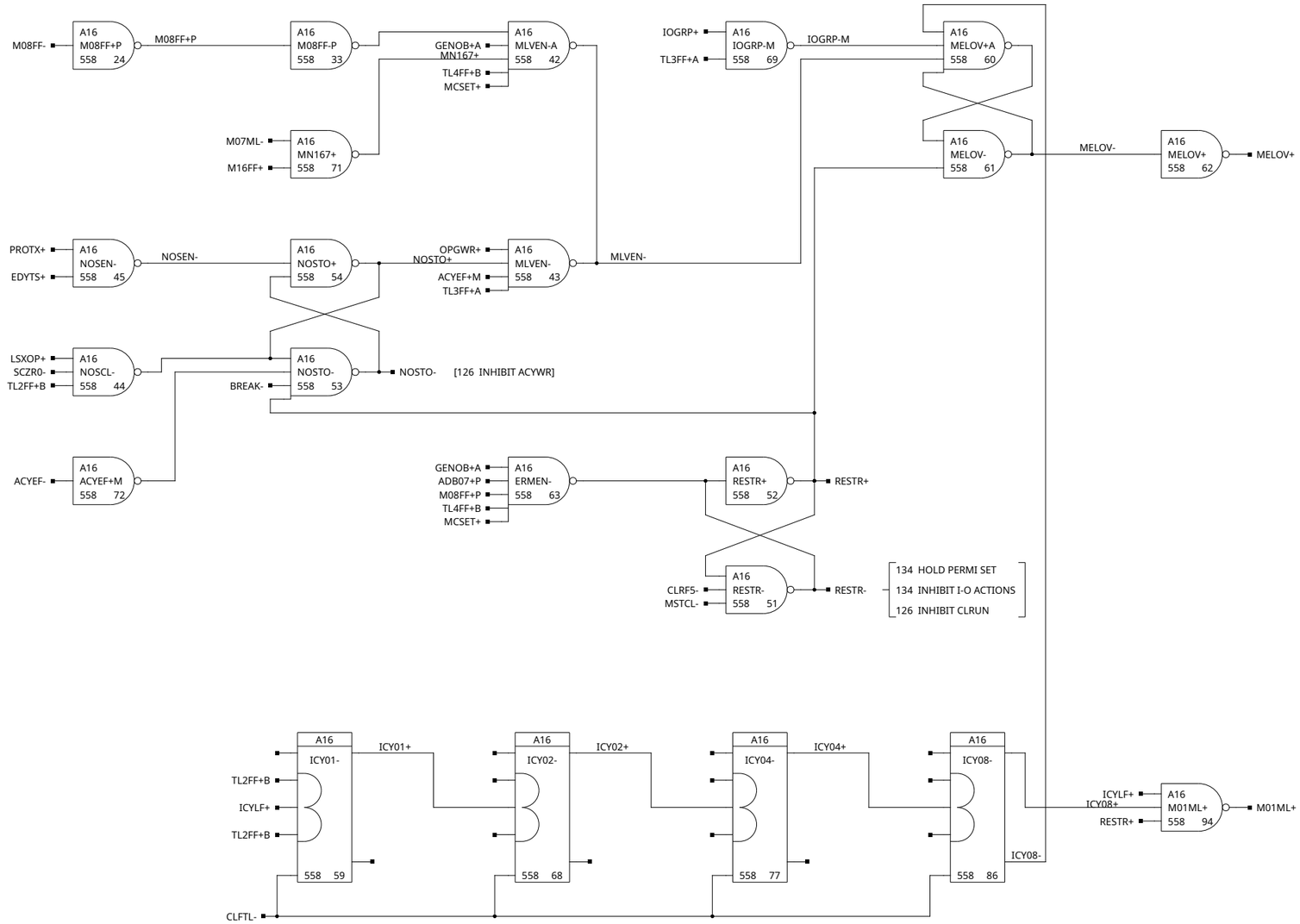

NOTES:

REV.	REVISIONS	CHK.
A		

S. R. 664-4192

HONEYWELL INC
COMPUTER CONTROL DIVISION
Old Connecticut Path, Framingham, Mass

DR. A. KMICINSKI	DATE	
ENG. K. ROY	11/4/69	
APP.	11/5/69	
PROJECT NO. 53218		

TITLE
H-316-08
MLO CONTROL

SIZE C | DWG NO. 70027536 | REV. /